# INVITATION TO BID
# LAKE HAVASU CITY, ARIZONA
## ITB NO.: B21-WWTP-500088
**FOR**

## NORTH REGIONAL WASTEWATER TREATMENT PLANT CHAIN & RAKE BAR SCREEN SYSTEM AND WASHPACTOR REPLACEMENT (EQUIPMENT PURCHASE WITH TECHNICAL ASSISTANCE/TRAINING)

**Laura Herzog**, **Procurement Specialist**
**E-Mail: HerzogL@lhcaz.gov**
**********************************************************

CITY CLERK'S OFFICE
2330 McCulloch Boulevard North
Lake Havasu City, AZ 86403
Phone: (928) 855-2116
**********************************************************

## BID CLOSING DATE: September 30, 2020
## BID CLOSING TIME: 3:00 p.m., ARIZONA TIME
BID OPENING ON THE SAME DAY at 3:00 p.m.

**********************************************************

**Pre-Bid Conference:** Monday September 14, 2020 at 10:00AM, Arizona Time
North Regional Wastewater Treatment Plant
7001 Whelan Drive
Lake Havasu City, Arizona 86404
**********************************************************

SUBMITTED BY:

**Company Name:** _____

**Address:** _____

**Phone No.:** _____

**Fax No.:** _____

**Contact:** _____

**Email:** _____

An electronic copy of this ITB and attachments, if any, is available from the City's website: http://www.lhcaz.gov/community-investment/bids.
All ITB documents shall be submitted in hard copy. Electronic or e-mailed submissions shall be rejected.

# ITB NO.: B21-WWTP-500088

# ITB TITLE: NORTH REGIONAL WASTEWATER TREATMENT PLANT CHAIN & RAKE BAR SCREEN SYSTEM AND WASHPACTOR REPLACEMENT

## TABLE OF CONTENTS


TABLE OF CONTENTS ..... 2
SECTION A - INVITATION TO BID ..... 3
SECTION B - INSTRUCTIONS TO BIDDERS ..... 5
SECTION C - CONTRACT TERMS AND CONDITIONS ..... 9
SECTION D - EMPLOYMENT ELIGIBILITY VERIFICATION FORM ..... 16
SECTION E - ADDITIONAL TERMS AND CONDITIONS ..... 17
SECTION F - INSURANCE REQUIREMENTS ..... 19
SECTION G – INTENT TO BID NOTIFICATION ..... 20
SECTION H - NO BID NOTIFICATION ..... 21
SECTION I - TECHNICAL SPECIFICATIONS ..... 22
SECTION J - BIDDER SIGNATURE PAGE ..... 25
SECTION K - BID PRICE SCHEDULE ..... 27
SECTION L - EXCEPTIONS TO SPECIFICATIONS ..... 28
SECTION M - REFERENCES ..... 29

# SECTION A - INVITATION TO BID

**ITB NO.: B21-WWTP-500088**

**ITB TITLE: NORTH REGIONAL WASTEWATER TREATMENT PLANT CHAIN & RAKE BAR SCREEN SYSTEM AND WASHPACTOR REPLACEMENT**

**ITB DESCRIPTION:** Replacement of two chain & rake bar screen systems and a washpactor/compactor that shall receive the flow of wastewater from the Lake Havasu City (LHC) owned Influent Pump Station (IPS). The screenings and solids will discharge into the new trough to a new washpactor/compactor with sufficient wash water to allow them to flow to washpactor. The screens will be installed into an existing channel as shown on provided drawings and accommodate the flow pattern through the screen belt. Both will have local start/stop, emergency stop, and main variable frequency drive (VFD) control panel that shall be located in the screens building MCC. Both screens will also be sequenced to start washpactor/compactor at the start of belt/band. The City will install the equipment using either City crews or will issue a separate contract with a non-City contract crew.

Notice is hereby given that sealed bids for Invitation To Bid Number (ITB): **B21-WWTP-500088** for ITB Title: **NORTH REGIONAL WASTEWATER TREATMENT PLANT CHAIN & RAKE BAR SCREEN SYSTEM AND WASHPACTOR REPLACEMENT** shall be received by the **City Clerk's Office, 2330 McCulloch Boulevard N., Lake Havasu City**, **Arizona, 86403,** until **3:00 p.m. Arizona Time** on **September 30, 2020.** All bids received in proper form shall be publicly opened and read aloud on the same day at 3:00 p.m., Room 109, City Hall, 2330 McCulloch Boulevard N., Lake Havasu City, Arizona, 86403. Public openings may be attended virtually by accessing the following video conferencing system:

To join the meeting on a computer or mobile phone: https://bluejeans.com/2330864044?src=calendarLink
Phone Dial-in
1.408.740.7256 (US (San Jose))
1.888.240.2560 (US Toll Free)
Meeting ID: 233 086 4044

**It is the sole responsibility of the Bidder to ensure the City receives the bid by the specified time. ALL BIDS MUST BE *TIME STAMPED* BY THE CITY BY THE STATED DEADLINE**. All late bids shall be rejected.

The outside of the sealed package must be clearly marked "**Sealed Bid**" with the **Bidder's Name**, **Address**, **Bid Title** and **Number**, and the **Closing Date. Bidder will submit one (1) original of the bid response.** Bidder should retain a copy for their records. All bids must be completed in ink or typewritten on a form to be obtained from the ITB documents and returned by the time cited above.

**Pre-Bid Conference:** **Pre-Bid conference will be held Monday September 14, 2020 at 10:00AM, Arizona Time, at the North Regional Wastewater Treatment Plant, 7001 Whelan Drive, Lake Havasu City, Arizona, 86404**
The Pre-Bid may be attended virtually by accessing the above-referenced video conferencing system link and phone number, meeting ID access

**Estimated Budget:** **$382,000**
**Bid Requirements:**

BID SECURITY: ☐ YES ☒ NO Bid security in the form of a certified check or cashier's check payable to Lake Havasu City, or a satisfactory bid bond, in the amount of ten percent (10%) of the Contract total shall be submitted with each bid.

CERTIFICATE OF INSURANCE: The successful Bidder shall be required to submit a standard insurance certificate as evidence of compliance with the contract insurance requirements. This shall be sent to the City with the agreement before execution by the City and prior to commencing work.

*Pursuant to the Americans with Disabilities Act (ADA), Lake Havasu City endeavors to ensure the accessibility of all of its programs, facilities and services to all persons with disabilities. If you need an accommodation for ITB meetings, please contact the City Clerk's Office, at (928) 453-4142. Please provide 24 hours notice so accommodations may be arranged.*

Publication Dates: **September 2nd and 9th (Havasu News Herald)**
**September 3rd and 10th (Arizona Business Gazette)**

# SECTION B - INSTRUCTIONS TO BIDDERS

1. **Bid Format.** Bid must be typewritten with a font size no less than 11 points or prepared in ink and must be submitted on the form(s) provided in the Invitation To Bid. Bidders shall return all information and forms as required on the Bidder's response sheet. Failure to complete all required forms may result in the bid being rejected as non-responsive. Bidder must submit one (1) original of the bid document.

   a. Unsigned offers will be considered non-responsive and will be rejected.

   b. Erasures, interlineations or other modifications in the bid must be initialed by a duly authorized vend or representative and must be the same person that signs the vendor(s) offer.

   c. In case of error in the extension of prices in the bid, the unit price will govern. No bid shall be altered, amended, or withdrawn after the specified bid closing date and time.

   d. It is the responsibility of the Bidder to examine the entire bid package and seek clarification of any item or requirement that may not be clear and to check Bidder responses for accuracy before submitting a bid.

   e. All bids shall be submitted in a sealed package and must be clearly marked "**Sealed Bid**" with the **Bidder's Name**, **Address**, **ITB Number** and **Title**, and the **Closing Date.** Bid packages with insufficient postage will not be accepted by Lake Havasu City.

   f. Lake Havasu City reserves the right to accept or reject any or all bids or any part thereof and waive informalities deemed in the best interest of the City.

2. **Bid Requirements.** The following forms must be completed, signed and submitted with the vendor's offer to be responsive and must include, but not limited to, the **COVER PAGE**, **BIDDER SIGNATURE PAGE**, **BID PRICE SCHEDULE**, **EXCEPTIONS TO SPECIFICATIONS** (if applicable), and **REFERENCES**. Bids must be signed by a duly authorized representative of the vendor. If a bid is signed by an agent of the Bidder, a Power of Attorney showing the authority of the agent to sign must be submitted with the bid or the bid shall be rejected. FAILURE TO SIGN AND SUBMIT THE **BIDDER SIGNATURE PAGE** SHALL RESULT IN REJECTION OF THE BID.

3. **Taxes.** Bid prices shall exclude Federal Excise Tax. Federal exemption certificates will be furnished upon written request. Lake Havasu City is not exempt from the applicable Arizona Sales Tax; Arizona Sales Tax will be indicated on the pricing sheet and marked as a separate line item after the total combined bid price. The applicable tax of any political subdivision shall not be a factor in determining the award of procurement.

4. **Price to Include Cost of Delivery.** If this is a bid for goods, then unless otherwise provided in the specifications, the bid price for each item must include the cost of delivery of the item(s) FOB within Lake Havasu City limits and to the specific destination shown in the specifications.

5. **Bids Must Conform to the Specifications.** The Bidder shall adhere to the specifications stated herein. Any exception taken to these specifications shall be so stated on the returned bid proposal. Deviations from any of the requirements in the specifications or drawings MAY RESULT IN BID REJECTION. Lake Havasu City shall hold the Bidder to all specification requirements. There is no time limit on this requirement. Deviations discovered after the unit(s) is accepted shall be corrected at no cost to the City. Any VERBAL communication from the City shall not be construed as approval of the acceptability of any deviation to any requirement or as authorization for any changes or additional charges on any contract. WRITTEN APPROVAL is required. Any deviation from the specification, or where submitted literature does not fully support the meeting of the specification, must be clearly cited in writing by the Bidder, but no deviation below minimum specification will be accepted. If this is a bid for goods and manufacturers' names, trade names, make, model or catalog numbers are used in the Specifications, they are for the purpose of describing and establishing commercial and industrial quality levels. Bids for equivalent items will be considered provided that such items are identified by manufacturer name, trade name, make, model and catalog number. If Bidder has any question whether an item is equivalent to the item specified, Bidder must submit a request for substitution.

6. **Silence of Specification.** The apparent silence of the general provisions and specifications as to any detail or the apparent omission from it of a detailed description concerning any point shall be regarded as meaning that only best commercial or industrial practice is to prevail and that only material and workmanship of first run manufacture quality are to be used.

7. **Periods of Time.** Periods of time, stated as a number of days, shall be calendar days unless otherwise specified.

8. **Descriptive Literature.** All Bidders must submit complete manufacturer's descriptive literature regarding the equipment they propose to furnish. Literature shall be sufficient in detail in order to allow full and fair evaluation of the bid submitted. Failure to include this information may result in the bid being rejected.

9. **Demonstrations.** The City may, at its discretion, require a demonstration of the equipment, material or product offered as part of the bid evaluation process. The equipment, material or product shall be provided by the Bidder at no cost to the City for a period of time deemed sufficient to properly evaluate the item.

10. **Replacement Parts.** Submission of this bid shall constitute a guarantee by the Bidder that a stock of replacement parts for the specified equipment, material or product is available to Lake Havasu City.

    Captive parts must be available within 48 hours following the placement of an order. The Vendor shall provide part(s) delivery, to include deliveries on Saturday, Sunday and holidays if required for an emergency. If special handling and/or freight are required, the vendor will assume all charges.

11. **Substitutions.** Bidders may propose substitutions. Requests for substitutions will be considered only if physically received by the contact person listed below, not less than ten (10) days before the closing date of the bid. Substitution requests must be submitted in a package marked as follows:

    Substitution Request, ITB No.: B21-WWTP-500088
    Lake Havasu City
    Administrative Services, Procurement Division
    Attn: Laura Herzog, Procurement Specialist
    2330 McCulloch Blvd N.
    Lake Havasu City, AZ 86403

    Samples must be presented for inspection and testing if requested. Samples must be furnished at no cost to the City. If not destroyed or mutilated in testing, samples will, upon request, be returned at Bidder's expense. If a proposed item is determined to be an acceptable substitute, an addendum will be issued.

12. **Bid Withdrawal.** Any bid may be withdrawn at any time prior to the specified date and time for bid closing by delivering a written request to the Procurement Official or designee at the location where bids are received signed by a duly authorized representative of Bidder. All bids shall be irrevocable for ninety (90) calendar days from the day of bid closing.

13. **Document Conflict.** In case of conflict between Specifications and the Contract Terms and Conditions and Instructions for Bidders, the specifications shall take precedence over and will be used in lieu of such conflicting portions of the Contract Terms and Conditions and Instructions to Bidders.

14. **Clarification/Protest/Question.** Any Bidder requesting clarification of or protesting or questioning any of the Specifications must submit specific questions or protests in writing (includes email) to the contact person listed below. Requests for clarification and protests must be physically received no later than September 21, 2020, end of day. Requests must be submitted in a package marked as follows:

    Clarification/Protest/Question
    ITB No.: B21-WWTP-500088
    Lake Havasu City
    Administrative Services, Procurement Division
    Attn: Laura Herzog, Procurement Specialist
    2330 McCulloch Blvd N.
    Lake Havasu City, AZ 86403
    Email to: Purchasing@lhcaz.gov

    A written response will be provided to all written requests for clarification and protests, copies of which will be sent to all vendors in receipt of these bid documents. Questions will not be answered orally. Oral instructions or information concerning the specifications provided by City officers, employees, or agents to prospective Bidders shall not bind the City.

15. **Addenda.** All addenda shall be issued no later than five (5) calendar days prior to the bid closing.

16. **Addenda Acknowledgement.** Receipt of bid addenda must be acknowledged by signing and returning the appropriate procurement document and acknowledging receipt on the proposal form.

17. **Documents are Public Records.** Lake Havasu City is subject to the Arizona Revised Statutes, Title 39, Chapter 1, relating to public records. All documents, reports, bids, submittals, working papers or other materials submitted to the City by Bidders shall become the sole and exclusive property of the City and become a public record.

18. **Copies.** Bidders may request copies of current or past procurement documents. The charge per copy is payable in advance. Please call for a current per copy cost.

19. **Late Delivery of Bid.** Late bids will not be opened or considered under any circumstances. Late Bid Notification will be sent to vendor.

**20. Rejection of Bids.** The City reserves the right to waive technical defects, discrepancies and minor irregularities in a bid. The City reserves the right to re-seal any bid that was opened prematurely. The City has determined this event as a minor irregularity. The Procurement Official shall be notified and shall log the event and place it in the procurement file. The City reserves the right to award any alternatives set forth in the bid documents in its sole discretion. Bids may be rejected if there is any alteration of the bid form, additions not called for, conditional bids, incomplete bids, or irregularities of any kind. The City reserves the right to reject any bid not in compliance with the bid documents, or prescribed public bidding procedures and requirements. Written notice of rejection of all bids shall be sent to all Bidders. ALL UNSIGNED BIDS SHALL BE REJECTED.

**21. Collusion.** Upon evidence that collusion exists among Bidders, none of the bids of participants in such collusion will be considered. All involved bids shall be rejected. Bids in which prices are unbalanced may be rejected. The Vendor will be required to complete, notarize and submit a "No-Collusion Affidavit" upon request by the City. **Failure of the vendor to submit a properly executed affidavit upon request by the City shall be grounds for rejection of the bid.**

**22. Contract Award.**

a. Awards will be made with reasonable promptness to the vendor(s) whose bid(s) is determined to be responsive and responsible that best conforms to the Invitation To Bid and will be the most advantageous to the City with respect to price, conformity to the specifications and other factors. Other factors to be considered may include, but are not limited to, quality, uniformity of product, and vendors past performance on other Contracts with the City.

b. The award will be made by low bid or including but not limited to individual item, category, group or by any combination of these or other methods or by all-or-none basis that is in the best interest of the City.

Bidders to be considered for award by category or group are not required to bid on each item. However, if all or part of the bid is awarded by category or group, only those Bidders who have inserted a bid price for each item in the category or group and who have provided either a percentage off manufacturer's list or percentage mark-up over cost for similar items not listed will be considered for award for that category.

City reserves the right to award the Bid to a primary and an alternate Bidder for the same bid item. The alternate Bidder will be used when the primary Bidder is unable to provide the materials when required, or when such action will provide the lowest final cost to the City.

c. A bid response is an offer by a vendor to Contract with the City based upon the terms, conditions, and specifications contained in the Invitation To Bid. Bids do not become Contracts unless and until they are accepted and an Award is made by Lake Havasu City. A Contract is formed when Lake Havasu City gives written Notice of Award(s) to the successful Bidder(s) and issues a Purchase Order. All Invitation To Bid documents, including but not limited to the specifications, terms and conditions, become the Contract and is extended to every Purchase Order for items or services contained in the submitted offer. The delivery or furnishing of any of the bid items cannot commence until a Contract is duly and properly executed.

**23. Rejection of All Bids and Cancellation of Award.** The City reserves the right to reject all bids or to cancel award of the Contract at any time before execution of the Contract by both parties if rejection of all bids or cancellation of the award is deemed to be in the City's best interest. In no event shall the City have any liability for the cancellation of award. The Bidder assumes the sole risk and responsibility for all expenses connected with the preparation of its bid and Contract negotiations.

**24. Reissuance of Bid.** The City reserves the right to re-issue a subsequent procurement for this service at any time if deemed to be in the best interest of the City.

**25. Protest of Award.** A protest of award must be physically delivered to the Procurement Official within five (5) working days of the notice of award date. Packages containing protests shall be marked as follows:

Bid Award Protest, ITB No.: B21-WWTP-500088
Lake Havasu City
Administrative Services Department
Procurement Division
Attn: Lynette Singleton, Procurement Official
2330 McCulloch Blvd N
Lake Havasu City, AZ 86403

**26. Notice of Award.** Official Notice of Award, if any, shall be sent in the form of an "Award Letter" and shall be signed by the duly authorized Lake Havasu City Official.

**27. Vendor Registration and IRS Form.** Prior to the award of a Contract, the successful Bidder must properly fill out and complete a City Vendor Registration and IRS W-9 Form and file the documents with the City's Administrative Services Department.

28. **Post Award Conference.** After the award has been made, the Contractor may be required to attend and participate in Post Award Conference. The purpose is to ensure the Contractor has a complete understanding of the specifications and the requirements of the Contract prior to commencing work.

29. **Disputes.** In the event any doubt or differences of opinions exists as to the items or service to be furnished hereunder, or from evaluation and/or testing of substitutes, or the interpretation of the provisions of this procurement, the decision of Lake Havasu City shall be final and binding upon all parties.

30. **Solicitation Document Conflicts.** In the event any discrepancies exist between the proposer(s) submitted response and the original solicitation document, the ITB on file with the City shall govern.

31. **Response Preparation Costs.** Costs incurred by any Bidder in preparation of a response to this Invitation To Bid shall be the sole responsibility of the Bidder and will not be reimbursed by the City.

32. **Bidder Exceptions.** Bidders that list and submit more than ten (10) separate items in "Section K – Exceptions to Specifications" shall be considered non-responsive; and said bid shall be rejected in its entirety.

# SECTION C - CONTRACT TERMS AND CONDITIONS

**Contract Documents.** This Contract includes the following Exhibits listed below and attached herein and incorporated herein by this reference:

☒ EXHIBIT 1 **-** EMPLOYMENT ELIGIBILITY VERIFICATION & FORM

☒ EXHIBIT 2 - AFFIDAVIT OF LAWFUL PRESENCE IN THE UNITED STATES

## STANDARD TERMS AND CONDITIONS

1. **Time is of the Essence.** Time is of the essence in the performance of this Contract. Contractor is providing services which involve health, safety and welfare of the general public. Delivery time is of the essence. Delivery must be made in accordance with the delivery schedule as promised by the Contractor.

2. **Contract Amendments.** This Contract shall be modified only by a written Contract Amendment signed by the City Manager or designee or City Official and persons duly authorized to enter into Contracts on behalf of the City Council.

3. **Parole Evidence.** This Contract is intended by the parties as a final expression of their agreement and is intended also as a complete and exclusive statement of the terms of this agreement. No course of prior dealings between the parties and no usage of the trade shall be relevant to supplement or explain any term used in this Contract. Acceptance or acquiescence in a course of performance rendered under this Contract shall not be relevant to determine the meaning of this Contract even though the accepting or acquiescing party has knowledge of the nature of the performance and opportunity to object.

4. **Subcontracts and Assignment.** Contractor shall not Subcontract any of the work required by this Contract or assign or transfer any of its interest in this Contract, without the prior written consent of City.

5. **No Third Party Beneficiaries.** City and Contractor are the only parties to this Contract and are the only parties entitled to enforce its terms. Nothing in this Contract gives or provides any benefit or right, whether directly, indirectly, or otherwise, to third persons unless such third persons are individually identified by name in this Contract and expressly described as intended beneficiaries of this Contract.

6. **Successors in Interest.** The provisions of this Contract shall be binding upon and inure to the benefit of the parties and their successors and approved assigns, if any.

7. **Merger Clause.** This Contract and the attached exhibits constitute the entire agreement between the parties. All understandings and agreements between the parties and representations by either party concerning this Contract are contained in this Contract. No waiver, consent, modification, or change in the terms of this Contract shall bind either party unless in writing and signed by both parties. Any written waiver, consent, modification, or change shall be effective only in the specific instance and for the specific purpose given.

8. **Compliance with Applicable Law.** Contractor shall observe and comply with all established federal, state, and local administrative rules, codes, ordinances, regulations, standards, and laws applicable to the work under this Contract regardless of whether or not they are referred to by the City.

9. **Governing Law.** The provisions of this Contract shall be construed in accordance with the laws of the State of Arizona and the provisions of the Lake Havasu City Municipal Code. In the event of litigation between the parties, venue in state trial courts shall lie exclusively in Mohave County, Arizona. In the event of litigation in a U.S. District Court, exclusive venue shall lie in the U.S. District Court located in Phoenix, Maricopa County, Arizona.

10. **Arbitration.** In accordance with A.R.S. Title 12, parties agree to use arbitration, after exhausting applicable administrative reviews, to resolve disputes arising out of this agreement where the sole relief sought is monetary damages of $40,000, or less, exclusive of interest and costs.

11. **Early Termination.** This Contract may be terminated as follows:

    a. City and Contractor, by mutual written agreement, may terminate this Contract at any time.

    b. City, in its sole discretion, may terminate this Contract for any reason on thirty (30) days written notice to Contractor.

    c. Either the City or Contractor may terminate this Contract in the event of a breach of the Contract by the other. Prior to such termination, the party seeking termination shall give to the other party written notice of the breach and intent to terminate. If the party committing the breach has not entirely cured the breach within fifteen (15) days of the date of the notice, then the party giving the notice may terminate the Contract at any time thereafter by giving a written notice of termination.

    d. Notwithstanding paragraph 11(c), City may terminate this Contract immediately by written notice to Contractor upon denial, suspension, revocation, or non-renewal of any license, permit, or certificate that Contractor must hold to provide services under this Contract.

**12. Payment on Early Termination.** Upon termination pursuant to paragraph 11, payment shall be made as follows:

a. If terminated under 11(a) or 11(b) for the convenience of the City, the City shall pay Contractor for work performed prior to the termination date if such work was performed in accordance with the Contract. City shall not be liable for direct, indirect, or consequential damages. Termination shall not result in a waiver of any other claim City may have against Contractor.

b. If terminated under 11(c) by the Contractor due to a breach by the City, then the City shall pay the Contractor for work performed prior to the termination date if such work was performed in accordance with the Contract.

c. If terminated under 11(c) or 11(d) by the City due to a breach by the Contractor, then the City shall pay the Contractor for work performed prior to the termination date provided such work was performed in accordance with the Contract less any setoff to which the City is entitled.

**13. Remedies.** In the event of breach of this Contract, the parties shall have the following remedies:

a. If terminated under 11(c) by the City due to a breach by the Contractor, the City may complete the work either itself, by agreement with another Contractor, or by a combination thereof. If the cost of completing the work exceeds the remaining unpaid balance of the total compensation provided under this Contract, then the Contractor shall pay to the City the amount of the reasonable excess.

b. In addition to the remedies in paragraphs 11 and 13 for a breach by the Contractor, the City also shall be entitled to any other equitable and legal remedies that are available.

c. If the City breaches this Contract, Contractor's remedy shall be limited to termination of the Contract and receipt of Contract payments to which Contractor is entitled.

**14. Waiver.** Waiver of any default under this Contract by City shall not be deemed to be a waiver of any subsequent default or a modification of the provisions of this Contract.

**15. Non Waiver of Liability.** The City as a public entity supported by monetary tax funding, in execution of its public trust, shall not agree to waive any lawful or legitimate right to recover monetary funds lawfully due it. Therefore, any Contractor agrees that it will not insist upon or demand any statement whereby the City agrees to limit in advance or waive any right the City might have to recover actual lawful damages in any court of law under applicable Arizona law.

**16. Conflict of Interest/Contract Cancellation.** Contractor stipulates that its officers and employees do not now have a conflict of interest and it further agrees for itself, its officers, and its employees that it will not contract for or accept employment for the performance of any work or services with any individual business, corporation, or government unit that would create a conflict of interest in the performance of its obligations pursuant to this Contract.

Pursuant to A.R.S. §38-511, this Contract is subject to cancellation by the City if any person significantly involved in initiating, negotiating, securing, drafting, or creating the Contract on behalf of Lake Havasu City is, at any time while the Contract is in effect, an employee of any other party to the Contract in any capacity or a consultant to any other party of the Contract with respect to the subject matter of the Contract.

**17. No Kick Back Fee.** Contractor stipulates that no person has been employed or has been retained to solicit or secure this Contract upon an agreement or understanding for a commission, percentage, brokerage, or contingent fee; and that no member of the City Council or any employee of City has any interest, financially or otherwise, in this Contract that has not been publically declared and procured in accordance with A.R.S. § 38-501 *et seq*.

In case of breach or violation of this requirement, the City shall have the right to annul this Contract without liability or at its discretion to deduct from the Contract price or consideration, the full amount of such commission, percentage, brokerage, or contingent fee.

**18. Gratuities.** The City may, by written notice to the Contractor, cancel this Contract if it is found that gratuities, in the form of entertainment, gifts, or otherwise, were offered or given by the Contractor or any agent or representative of the Contractor, to any officer or employee of the City. In the event this Contract is canceled by the City pursuant to this provision, the City shall be entitled, in addition to any other rights and remedies, to recover or withhold from the Contractor the amount of the gratuity.

**19. Non Exclusive Contract.** Any subsequent Contract resulting from the solicitation shall be awarded with the understanding and agreement that it is for the sole convenience of the City. The City reserves the right to obtain like goods, service, or finished end product from another source when necessary.

**20. Ownership of Work.** All work products created by the Contractor as part of Contractor's performance of this Contract shall be the exclusive property of the City. If any such work products contain intellectual property of the Contractor that is or could be protected by federal copyright, patent, or trademark laws, Contractor hereby grants City a perpetual, royalty-free, fully paid-up, non-exclusive and irrevocable license to copy, reproduce, deliver, publish, perform, dispose of, use, re-use, in whole or in part, and to authorize others to do so, all such work products. City shall have no rights in any pre-existing work product of Contractor provided to City by Contractor in the performance of this Contract except to copy, use, and re-use any such work product for City use only. If this Contract is terminated prior to completion, and the City is not in default, City, in addition to any other rights provided by this Contract, may require the Contractor to

transfer and deliver all partially completed work products, reports or documentation that the Contractor has specifically developed or specifically acquired for the performance of this Contract.

**21. Licenses and Permits.** Contractor shall maintain in current status all federal, state, and local laws, licenses, and permits required for the operation of the business conducted by the Contractor as applicable to this Contract.

**22. Force Majeure.**

a. Except for payment of sums due, neither party shall be liable to the other nor deemed in default under this Contract if and to the extent that such party's performance of this Contract is prevented by reason of force majeure. The term 'force majeure' means an occurrence that is beyond the control of the party affected and occurs without its fault or negligence. Without limiting the foregoing, force majeure includes acts of God; acts of the public enemy; war; riots; strikes; mobilization; labor disputes; civil disorders; fire; flood; lockouts; injunctions-intervention-acts; or failures or refusals to act by government authority; and other similar occurrences beyond the control of the party declaring force majeure which such party is unable to prevent by exercising reasonable diligence.

b. Force Majeure shall not include the following occurrences:

1) Late delivery of equipment or materials caused by congestion at a manufacturer's plant or elsewhere, or an oversold condition of the market;

2) Late performance by a subcontractor unless the delay arises out of a force majeure occurrence in accordance with this force majeure term and condition; or

3) Inability of either the Contractor or any subcontractor to acquire or maintain any required insurance, bonds, licenses, or permits.

c. If either party is delayed at any time in the progress of the work by force majeure, the delayed party shall notify the other party in writing of such delay, as soon as is practicable and no later than the following working day, of the commencement thereof and shall specify the causes of such delay in such notice. Such notice shall be delivered or mailed certified-return receipt and shall make a specific reference to this article, thereby invoking its provisions. The delayed party shall cause such delay to cease as soon as practicable and shall notify the other party in writing when it has done so. The time of completion shall be extended by Contract Amendment for a period of time equal to the time that results or effects of such delay prevent the delayed party from performing in accordance with this Contract.

d. Any delay or failure in performance by either party hereto shall not constitute default hereunder or give rise to any claim for damages or loss of anticipated profits if, and to the extent that such delay or failure is caused, by force majeure.

**23. Late Submission of Claim.** The City shall not honor any invoices or claims which are tendered one (1) year after the last item of the account accrued.

**24. Access to Records.** Contractor shall maintain fiscal records and all other records pertinent to this Contract. All fiscal records shall be maintained pursuant to generally accepted accounting standards, and other records shall be maintained to the extent necessary to clearly reflect actions taken. All such records shall be retained and kept accessible for no less than **six (6) years** following final payment. City's authorized representatives shall have the right to direct access to all of Contractor's books, documents, papers and records related to this Contract for the purpose of conducting audits and examinations and making copies, excerpts and transcripts. City shall reimburse Contractor for Contractor's cost of preparing copies.

**25. Insurance and Performance/Payment Bond Requirements.** Contractor shall maintain throughout the term of the Contract the amounts and limits established and referenced in the solicitation documents and included herein.

**26 Indemnity.** Contractor shall indemnify and hold harmless City, its officers and employees from and against any and all liabilities, damages, losses, and costs, including reasonable attorney's fees, but only to the extent caused by the negligence, recklessness, or intentional wrongful conduct of Contractor or other persons employed or used by the Contractor in the performance of this Contract. It is agreed that Contractor will be responsible for primary loss investigation, defense, and judgment costs where this indemnification is applicable.

**27. Indemnity–Patents, Copyright, and Trademark.** Contractor agrees to defend City, mayor, council, appointed boards and commissions, officers, officials, employees, and agents individually and collectively at Contractor's own expense, in all suits, actions, or proceedings in which Contractor is made a defendant for actual or alleged infringement of any United States of America or foreign letters patents resulting from Contractor's use of the goods, service, or finished end product purchased as a result of this Procurement (Invitation To Bid (ITB) or Request For Proposal (RFP)) and subsequent Contract. Contractor further agrees to pay and discharge any and all judgments or decrees which may be rendered in any such suit, action, or proceedings against City. Contractor agrees to indemnify and hold harmless the City from any and all license, royalty and proprietary fees or costs, including legal costs, which may arise out of City's purchase and use of goods, service, or finished end product supplied by the Contractor. Contractor will indemnify City against all claims for damages to persons or property resulting from defects in materials or workmanship. It is expressly agreed by Contractor that these covenants are irrevocable and perpetual.

28. **No Advance Payments.** Advance payments are not authorized. Payment will be made for only actual services or commodities that have been received and accepted by the City.

29. **Advertisement.** Contractor shall not advertise or publish news releases concerning this Contract without the prior written consent of the City Manager or designee.

30. **Americans with Disabilities Act.** The Contractor shall comply with all applicable provisions of the Americans with Disabilities Act, Public Law 101-336, 42 U.S.C. 12101-12213, and applicable federal regulations under the Act.

31. **Anti-Discrimination Clause.** Contractor shall not discriminate based on race, religion, color, sex, marital status, familial status, national origin, age, mental or physical disability, sexual orientation, gender identity, source of income, or political affiliation in programs, activities, services, benefits, or employment. Contractor shall not discriminate against minority-owned, women-owned, or disadvantaged small businesses. Contractor shall include a provision in each sub-contract requiring subcontractors to comply with the requirements of this clause.

32. **OMB Circular A-133.** If Contractor is determined by the City to be a sub-recipient of federal funds passed through the City, the Contractor must submit an annual Federal Compliance Audit in conformity with the OMB Circular A-133, which applies the Federal Single Audit Act of 1984, Public Law 98-502, to non-profit organizations.

33. **Disadvantaged/Minority/Woman Business Enterprise.** Contractor agrees to give Disadvantaged/ Minority/Woman Businesses the maximum practical opportunity to participate in this Contract when possible, by obtaining supplies, materials, and services from such firms.

34. **Non Appropriation Clause - Fiscal Year.** If appropriations are reallocated, reduced or eliminated by legislative action or for any reason these goods and / or services are not funded, during any fiscal year the City may take any of the following actions:

    a. Accept a decrease in price offered by the Contractor and complete the Contract;

    b. Place the Contract on-hold and pay the Contractor for work performed up to the date of the non-appropriation notice. Work must be performed in accordance with the Contract prior to payment and be less any setoff to which the City is entitled. The contract may be resumed at a later date when funding is reestablished. Contract cannot be resumed beyond a (4) four year time period from the date of non-appropriation notice. Contractor must also reaffirm pricing and resubmit insurance and bonding certificates, if applicable. Documents must be received by the City prior to resuming the Contract;

    c. Cancel the Contract and pay the Contractor for work performed up to the date of the non-appropriation notice. Work must be performed in accordance with the Contract prior to payment and be less any setoff to which the City is entitled, and re-solicit a new procurement;

    d. Cancel the contract and re-solicit the requirements;

    e. Cancel the contract.

35. **Non Appropriation Clause - Future Fiscal Year.** Funds may not presently be available for performance under this Contract beyond the current City's fiscal year. If payment for performance under this Contract extends into next fiscal year, the City's obligation to pay for such performance is subject to approval of future appropriations to fund this Contract by legislative action. The City shall have no legal liability to pay funds due for performance under the terms of the Contract until and unless funds are appropriated by legislative action.

36. **Notice to Proceed.** The Contractor agrees to render services promptly and diligently upon receipt of written notice by a duly authorized City agent and to proceed with any or all of the services set forth herein.

37. **Right to Assurance.** Whenever one party to this Contract in good faith has reason to question the other party's intent to perform, the former party may demand that the other party give a written assurance of this intent to perform. In the event that a demand is made and no written assurance is given within **seven (7) days**, the demanding party may treat this failure as an anticipatory repudiation of this Contract.

**38. Non Performance.** In the event of nonperformance under this Contract, the City, after **seven (7) days** written notice to the Contractor, shall have the right to obtain from other sources such products and/or services as may be required to accomplish the work not performed, and it is agreed that the difference in cost, if any, for said work or goods shall be borne by the Contractor.

For purposes of this section, nonperformance shall be defined as failure to appear and perform work and/or deliver goods as specified and scheduled.

**39. Liens.** Contractor shall hold the City harmless from claimants supplying labor or materials to the Contractor or its subcontractors in the performance of the work required under this Contract. Contractor shall provide written certification that all liens against materials and labor have been satisfied, before the City will make final payment.

**40. Severability.** If any term or provision of this Contract is declared by a court of competent jurisdiction to be illegal or in conflict with any law, the validity of the remaining terms and provisions shall not be affected, and the rights and obligations of the parties shall be construed and enforced as if the Contract did not contain the particular term or provision held invalid.

**41. Title and Risk of Loss.** The title and risk of loss of materials or service shall not pass to the City until the City actually receives the material or service at the point of delivery FOB; and such loss, injury, or destruction shall not release seller from any obligation hereunder. The City shall notify the Seller promptly of any damaged goods, service, or finished end product, and further shall assist the Seller in arranging for inspection.

**42. FOB Point of Delivery.** All pricing, labor, materials, and services are to be FOB destination and delivered within the city limits of Lake Havasu City, Arizona, unless otherwise specified elsewhere in the solicitation documents.

**43. Employment Standards.** The Contractor agrees that upon request by Lake Havasu City, it shall remove from the City's premises any Contractor's employee, who, in the reasonable opinion of Lake Havasu City, is guilty of improper conduct, bringing any unauthorized personnel (including their own children) into a facility or work area, or is not qualified to perform the work assigned. The Contractor shall understand that its employees shall complete and pass a security background check, if so requested.

**44. Organization–Employment Disclaimer.** The agreement resulting hereunder is not intended to constitute, create, give rise to, or otherwise recognize a joint venture agreement or relationship, partnership or formal business organization of any kind, and the right and obligations of the parties shall be only those expressly set forth in the agreement. The parties agree that no persons supplied by the Contractor in the performance of Contractor's obligations under the agreement are considered to be City employees and that no rights of City civil service, retirement or personnel rules accrue to such persons. The Contractor shall have total responsibility for all salaries, wage bonuses, retirement, withholdings, workers' compensation, occupational disease compensation, unemployment compensation, other employee benefits, and all taxes and premiums appurtenant thereto concerning such persons and shall save and hold the City harmless with respect thereto.

**45. Cooperative Governmental Purchasing.** Pursuant to A.R.S. § 41-2632, other public agencies may contract directly with Contractor under the terms of the Contract. Contractor may be charged a one percent (1%) administrative fee for the use of said Contract. Contractor shall notify the City prior to their use of the Contract in providing goods, service, or finished end product to other agencies. If applicable, Contractor shall pay the administrative fee upon execution of said Contract, and Contractor shall provide a yearly sales report to the City ending December 31 of each year. Contractor shall make fees payable to the City at time of cooperative agency payment.

**46. Quarterly Reports.** If requested, parties agree that Contractor shall provide quarterly reports to City which shows each item purchased from City in the prior quarter, the individual cost of each item, and the total cost of all items purchased in the quarter.

**47. General Product Requirements.** All items delivered shall conform to the Specifications and shall be in first class condition. Acceptance by the City shall be subject to inspection and approval. In case of conflict between the Specifications and Additional Contract Terms and these Standard Terms and Conditions, the Specifications and Additional Contract Terms shall prevail. The apparent silence of the Standard Terms and Conditions and Specifications and Additional Contract Terms as to any detail or the apparent omission of a detailed description concerning any point shall be regarded as meaning that only best commercial practice is to prevail and that only items manufactured with material and workmanship of first quality are to be supplied. All items delivered shall be of identical style, quality, and appointments as those offered to the trade in general during the course of the model year. All items delivered shall be new current models, free and clear of all liens and encumbrances. Unless otherwise provided in the Specifications, items shall, where appropriate, be prepared for delivery to and use by the City by a factory franchised agent. Each item delivered shall be accompanied by all pre-delivery inspection sheets, coupons, certificates, descriptive literature, warranty cards, and information provided by the manufacturer and furnished to the trade in general. All such documents shall be properly completed and signed in accordance with industry standards. All items required by the Specifications to be UL listed shall indicate the current UL listing on the item. All items that are required by the Specifications to have any other certification shall indicate that certification on the item or in the accompanying documentation.

**48. Inspection and Acceptance.** Goods, service, or finished end product furnished under this Contract shall be subject to inspection and testing by the City at times and places determined by the City within a reasonable time after arrival at its ultimate destination. If the City finds goods, service, or finished end product to be incomplete, unsatisfactory, defective, or of inferior quality or workmanship, or fails to meet the specifications or other requirements or not in compliance with the Contract, the City, at its sole discretion, may either reject the goods, service, or finished end product, require Contractor to correct any defects without charge, or negotiate with Contractor to sell the goods, service, or finished end product to the City at a reduced price, whichever the City deems equitable under the circumstances. Lake Havasu City may return such goods, service, or finished end product to Contractor at Contractor's expense. Contractor shall reimburse Lake Havasu City for any amounts paid by the City for the returned goods, service, or finished end product and any costs incurred by the City to return the goods to the Contractor. If Contractor is unable or refuses to cure any defects within a time deemed reasonable by the City, the City may reject the goods, service, or finished end product and cancel the Contract in whole or in part. Payment for merchandise, service, or finished end product prior to inspection shall not be construed to be an acceptance of unsatisfactory or defective merchandise, service, or finished end product. Nothing in this paragraph shall in any way affect or limit the City's rights as buyer under the Uniform Commercial Code, including the rights and remedies relating to rejection or revocation of acceptance under A.R.S. § 47-2711 et seq.

**49. Warranty and Service.** Contractor warrants all goods, service, or finished end product delivered to be free from defects in labor, material and manufacture and to be in compliance with the specifications set out in this Contract. All implied and express warranty provisions of the UCC are hereby incorporated by reference. Further, Contractor represents and warrants that Contractor has the power and authority to enter into and perform this Contract and that this Contract, when executed and delivered, shall be a valid and binding obligation of Contractor enforceable in accordance with its terms. All items delivered shall carry either the standard manufacturer's warranty or service policy providing that warranty work will be performed by any authorized manufacturer's dealer, or if specified in the Specifications, the warranty and service policy called for in the Specifications. In addition, unless otherwise noted in the Specifications, the warranty and service policy indicated above shall include the following terms and conditions:

a. There shall be no distance or time limitations, not applicable to the trade in general, on either standard or extended warranty or labor. All franchised or authorized dealers of the item in the state shall honor warranty. Warranty maintenance requirements, when performed by City, shall be acceptable to dealer when said work performance meets or exceeds the dealer certification requirements. City shall provide evidence of such work performance upon request, as required by the manufacturer. Any extended warranty period customarily granted shall be made available to City at no additional cost, and

b. City shall be advised of all product recalls on all or any part of the item at no additional cost. All product recall information, replacement parts and labor, shall be provided to the City as soon as available to dealer.

**50. Shipment Reservation Prohibited.** Contractor shall not ship the goods, service, or finished end product under reservation and no tender of a bill of lading will operate or function as a tender of the goods or finished end product.

**51. No Replacement of Defective Tender.** Contractor tender of goods, service, or finished end product must fully comply with all provisions of this Contract as to time of delivery, quantity, assortment, quality, and the like. If a tender is made which does not fully conform, this shall constitute a breach, and the Contractor shall not have the right to substitute a conforming tender.

**52. Product Correction.** It is agreed that Contractor shall be fully responsible for making any correction, replacement, or modification necessary for specification or legal compliance. In the event of any call back, Contractor agrees to give the City first priority. Contractor agrees that if the product or service offered does not comply with the foregoing, the City has the right to cancel the purchase at any time with a full refund within thirty (30) days after notice of non-compliance and Contractor further agrees to be fully responsible for any consequential damages suffered by the City.

**53. Default in One Installment to Constitute Breach.** Each installment or lot of the agreement is dependent on every other installment or lot and a delivery of nonconforming goods, service, or finished end product or a default of any nature under one installment or lot will impair the value of the whole agreement and constitute a breach of the agreement as a whole.

**54. Hazardous Materials.** Contractor warrants that goods, service, or finished end product provided under this Contract comply with all federal, state, and local safety and health requirements. All items that include hazardous materials shall be labeled in accordance with law with the names of the hazardous ingredients, the hazards of the materials, and the appropriate precautions. Contractor shall provide a Material Safety Data Sheet as defined by OSHA for any goods, service, or finished end product provided under this Contract which may release, or otherwise result in exposure to, a hazardous substance under normal conditions of use. In addition, Contractor shall label, tag, or mark such goods, service, or finished end product. Those materials for which toxicological or hazard data are unavailable shall carry a label stating: "Toxicological and other hazards unknown. Handle as extremely hazardous."

**55. Security.** Any disclosure or removal of any City material and/or information marked as confidential or private on the part of Contractor shall be cause for immediate cancellation of the Contract. Any liability, including, but not limited to, attorney fees, resulting from any action or suit brought against the City as a result of the Contractor's willful or negligent release of information, documents, or property contained in City facilities shall be borne solely by the Contractor.

**56. Preference for Recycled Materials.** The City shall prefer materials or supplies manufactured from recycled materials if the recycled product is available, it meets the requirements set forth in the Specifications, and the cost of the product does not exceed the cost of non-recycled products by more than five percent (5%).

**57. Prohibition on Government Contracts.** The Contractor shall comply with all applicable provisions of the A.R.S. § 35 Public Finances. Contractor further agrees that they shall not have any scrutinized business operations in Sudan and/or Iran.

**58. Terrorism Country Divestments.** In accordance with A.R.S. § 35 Public Finances, the City is prohibited from purchasing from a company that is in violation of the Export Administration Act. By entering into the Contract, Contractor warrants compliance with the Export Administration Act.

**59. Contractor's Employee E-Verify Eligibility Requirement.** The Contractor shall comply with all applicable provisions of the Federal Immigration and Nationality Act (FINA), A.R.S. § 41-4401 and A.R.S. § 23-214, which requires compliance with federal immigration laws by State employers, State contractors and State subcontractors in accordance with the E-Verify Employee Eligibility Verification Program. See the following website for further information: www.dhs.gov/e-verify.

Pursuant to A.R.S. § 41-4401, the City may request verification of compliance from any contractor or subcontractor performing work under this Contract. The City reserves the right to confirm compliance. Should the City suspect or find that the Contractor or any of its subcontractors are not in compliance, the City may pursue any and all remedies allowed by law, including, but not limited to suspension of work, termination of the Contract for breach or default, and suspension and/or debarment of the Contractor. All costs necessary for compliance shall be solely borne by the Contractor.

**60. Israel.** If applicable, Contractor certifies that it is not currently engaged in, and agrees for the duration of this Contract that it will not engage in, a boycott of goods and services from Israel, as defined in A.R.S. § 35-393.

## SECTION D - EMPLOYMENT ELIGIBILITY VERIFICATION FORM

### INSTRUCTIONS FOR COMPLETION OF EMPLOYMENT ELIGIBILITY VERIFICATION FORM

**WHO MUST COMPLETE THIS FORM:**
In accordance with Lake Havasu City Code Chapter 3.30, Employment of Unauthorized Aliens, all contractors and subcontractors furnishing labor, time, or effort for construction or maintenance of any structure, building, transportation facility, or improvements of real property must complete this form.

Contractors or subcontractors, as described above, must certify that they have complied, in good faith, with the applicable requirements of the Federal Immigration Control and Reform Act with respect to the hiring of covered employees. This certification must be executed by an authorized representative.

**WHEN THIS FORM MUST BE COMPLETED:**
This form must be completed by all contractors and subcontractors and submitted to the City department awarding the contract, license agreement, or lease no later than notification of successful direct selection, bid, request for proposals, request for qualification, or any similar competitive or noncompetitive procurement or bidding process.

**This form can be found at:**

https://www.lhcaz.gov/docs/default-source/department-documents/employerverificationofemploymenteligibility.pdf?sfvrsn=4408297c_11

## SECTION E - ADDITIONAL TERMS AND CONDITIONS

1. **Pre-Bid Conference.** A Pre-Bid conference will be held on Monday September 14, 2020 at 10:00AM, Arizona Time at the North Regional Wastewater Treatment Plant, 7001 Whelan Drive, Lake Havasu City, Arizona 86404. The Pre-Bid may be attended virtually by accessing the following video conferencing system:
   To join the meeting on a computer or mobile phone:
   https://bluejeans.com/2330864044?src=calendarLink
   Phone Dial-in
   1.408.740.7256 (US (San Jose))
   1.888.240.2560 (US Toll Free)
   Meeting ID: 233 086 4044

2. **Add/Delete Items.** City reserves the right to add or delete items during term of awarded Contract as dictated by the changing/updating of employees, buildings, equipment, roads, or services. The Bid Sheets may be a partial and not a complete list of items to be purchased.

3. **Purchase Orders.** Lake Havasu City shall issue a purchase order for the goods or services covered by this Contract. All such Purchase Orders will reference the Contract number. Bidder shall have 24-hour order and delivery capability in the event of emergencies, if so required by specifications.

4. **Inventory.** Bidder agrees to maintain reasonable inventories to insure that back orders will be kept to a minimum and delivery can be accomplished according to the terms of this Invitation To Bid. Repeated back-ordering by the successful Bidder on City orders may be cause for Contract cancellation or the City to affect cover by utilizing alternate sources.

5. **Packing and Shipping.** Deliveries shall be made as specified without charge for boxing, crating, cartage or storage unless otherwise specified, and material(s) and/or product(s) shall be suitably packed to secure lowest transportation cost(s), and in accordance with common carrier's tariffs, ICC regulations, and other applicable transportation laws, rules and requirements. Containers must be clearly marked with the Buyer's Purchase Order number, contact person, phone number, department/division, and FOB destination address. All documents must bear Buyers Purchase Order (PO) number(s) and must be plainly marked on all invoices, packages, bills of lading, and shipping orders. Supplier must ensure that each shipment is accompanied by a packing slip that indicates, at a minimum Supplier part numbers, Buyer's part numbers and the applicable Purchase Order number(s). Buyers count and/or weight shall be final and conclusive for each shipment. Shipping receipts or bills of lading shall be forwarded to Buyer on the date material(s) and/or product(s) are shipped. Material(s) and/or Product(s) are to be securely packed to ensure against damage from all incidents of weather and/or transportation.

6. **Terms of Payment.** Bidder shall indicate terms of payment where indicated in the bid documents and any discounts proposed for early payment. For purposes of comparing discounts bids, the City shall only consider discounts that allow a minimum of twenty (20) days for payment. Discount period will start from the date of receipt of goods or current invoice, whichever is later, to the date the City's payment is mailed. Unless freight and other charges are itemized, any discount provided will be taken on full amount of invoice. Payments shall comply with the requirements of A.R.S. § 35-342.

**7.** **Invoice.** The Contract shall be paid per terms and conditions set herein and upon receipt and acceptance of either the deliverables under Contract or an invoice that is documented and itemized, whichever occurs later. A separate invoice shall be issued for each shipment of deliverables.

The City reserves the right to reject any and all invoices that do not meet the City's accounting standard levels of acceptability. The City will instruct the Contractor on an acceptable invoice format. The City reserves the right to update and make changes to the invoice format that will enhance the City's business practices.

INVOICES FOR ALL DELIVERABLES SHALL BE SUBMITTED IN DUPLICATE TO:

**Lake Havasu City**
**Accounts Payable**
**2330 McCulloch Boulevard N.**
**Lake Havasu City, AZ 86403**

**8.** **Returns.** Bidder shall allow returns within thirty (30) days of purchase at no charge. Within five (5) calendar days of notice of award, successful Bidder shall submit complete return policy including all terms and conditions for all items listed on pricing sheets. Failure to submit return policy within five (5) calendars days of notice of award may result in City awarding to next lowest, responsive, responsible Bidder.

## SECTION F - INSURANCE REQUIREMENTS

**Contractor shall at all times maintain in force at Contractor's expense, each insurance noted below:****

Workers Compensation **insurance in compliance with A.R.S. Title 23, Chapter 6, together with Employer's Liability insurance with coverage limits of not less than $1,000,000 must be included, unless exempt. (**See Exhibit 7)

THIS COVERAGE IS REQUIRED. Attach Certificate of Insurance. If Contractor does not have coverage and claims to be exempt, attach Exhibit 5in lieu of Certificate.

**Professional Liability** insurance with a combined single limit of not less than ☐ $1,000,000, ☐ $2,000,000 each claim, incident, or occurrence, with an annual aggregate limit of ☐ $1,000,000, ☐ $2,000,000. This is to cover damages caused by error, omission, or negligent acts related to professional services provided under this Contract. The policy must provide extended reporting period coverage for claims made within two years after this Contract is completed.

☐ Required by City ☒ Not required by City

**Commercial General Liability** insurance, on an occurrence basis, with a combined single limit of not less than ☒ $1,000,000,

☐ $2,000,000 each occurrence for Bodily Injury and Property Damage, with an annual aggregate limit of ☐ $1,000,000,

☒ $2,000,000. This insurance must include contractual liability coverage.

☒ Required by City ☐ Not required by City

**Commercial Automobile Liability** insurance with a combined single limit, or the equivalent of not less than ☒ $1,000,000,

☐ $2,000,000 each occurrence for Bodily Injury and Property Damage, including coverage for owned, hired, or non-owned vehicles.

☒ Required by City ☐ Not required by City, if use of the vehicle is not required as part of the service provided the City.

**Contractor's Pollution Liability** insurance on an occurrence basis, with a combined single limit of not less than ☐ $1,000,000 each occurrence with an annual aggregate limit. Coverage to include sudden and accidental pollution events, clean up costs, and liability for third-party bodily injury and property damage arising from pollution conditions caused by the Contractor's performance under Contract.

☐ Required by City ☒ Not required by City

**Contractor's Product Liability.** Insurance on an occurrence basis, with a combined single limit of not less than ☒ $1,000,000 each occurrence with an annual aggregate limit. Certificates of Insurance for product liability coverage are required from Contractors or product manufacturers of higher hazard equipment where potential for loss is greater than normal (i.e., chemicals, heavy road equipment, machinery, etc.). This procedure verifies that the manufacturing company has proper product liability insurance and economic backing in the event of a catastrophic loss relating to a failure, malfunction, defect or other condition relating to the manufacture of the specific product.

☒ Required by City ☐ Not required by City

Coverage must be provided by an insurance company admitted to do business in Arizona and rated A-VII or better by AM Best's Insurance Rating. Contractor's coverage will be primary in the event of loss. Contractor shall pay all deductibles and retentions. A cross-liability clause or separation of insured's condition will be included in all commercial general liability policies required by this Contract.

**Contractor shall furnish a Certificate of Insurance to the City with the signed Contract.** The Certificate shall provide that there shall be no cancellation, termination, material change, or reduction of limits of the insurance coverage without **ten (10) working days** written notice from the Contractor's insurer to the City. The Certificate shall also state the deductible or retention level. If requested, complete copies of insurance policies shall be provided to the City.

If Contractor ships all goods, service or finished end product to be supplied under this Contract by common carrier and will not make deliveries to the City using its own employees, and/or transportation proof of insurance as set forth in Section F of the solicitation documents will not be required.

The amount and type of insurance coverage as required herein is not intended to, and shall not be interpreted to, limit the scope of the indemnity set forth in this section.

**Additional Insureds.** For commercial general liability and automobile liability insurance policies, the Insurance Certificate shall also provide that "**Lake Havasu City, its agents, directors, officers, officials, and employees are additional Insureds with respect to Contractor's services to be provided under this Contract**." If requested, complete copies of insurance policies shall be provided to the City.

****Note to Contract Originator**: For certain types of contracts additional insurance may be required. Contact Risk Management Manager.

## SECTION G – INTENT TO BID NOTIFICATION

**ITB NO.: B21-WWTP-500088**

**ITB TITLE: NORTH REGIONAL WASTEWATER TREATMENT PLANT CHAIN & RAKE BAR SCREEN SYSTEM AND WASHPACTOR REPLACEMENT**

**CLOSING DATE & TIME: September 30, 2020 at 3:00 p.m. Arizona Time**

## LETTER OF INTENT TO BID

This is to notification that it is our present intent to submit a bid in response to the above referenced ITB.

The individual to whom all information regarding this ITB should be transmitted is:

Company Name: _____

Contact Name: _____

Street Address: _____

City, State, & Zip: _____

Phone Number: Fax Number: _____

E-Mail Address: _____

Submit this Letter of Intent by the deadline for requests for clarification and protests which must be physically received by September 21, 2020, end of day, Arizona Time.

Clarification/Protest/Question/Letter of Intent to Bid
ITB No.: **B21-WWTP-500088**
Lake Havasu City
Administrative Services Department, Procurement Division
Attn: Laura Herzog, Procurement Specialist
2330 McCulloch Blvd N
Lake Havasu City, AZ 86403
Email to: purchasing@lhcaz.gov

## SECTION H - NO BID NOTIFICATION

**ITB NO.: B21-WWTP-500088**

**ITB TITLE: NORTH REGIONAL WASTEWATER TREATMENT PLANT CHAIN & RAKE BAR SCREEN SYSTEM AND WASHPACTOR REPLACEMENT**

**CLOSING DATE & TIME: September 30, 2020 at 3:00 p.m. Arizona Time**

Lake Havasu City is interested in receiving competitive pricing on all procurements. It is the desire to keep your firm as a vendor and a supplier of materials, equipment, services, etc. Therefore, it is important for us to determine why you are not submitting a bid on this procurement. Your input will be carefully analyzed to try and determine if future changes are needed in our specifications and procedures.

Please indicate which statement is true for your firm: (PLEASE CHECK ITEMS THAT APPLY)

_____ Time frame for bidding was too short.

_____ No bid at this time.

_____ We do not supply the requested product or service(s).

_____ Quantities offered are too small or too large to be supplied by our company. (Please circle one of the underlined.)

_____ Specifications are "restrictive" or written around a particular product. (Please elaborate by submitting information on a separate sheet.)

_____ Can not bid against the manufacturer, distributor or jobber on this procurement.

_____ Other: _____

COMPANY NAME: _____

AUTHORIZED SIGNATURE: _____

RETURN TO: Laura Herzog, Procurement Specialist
Administrative Services, Procurement Division
2330 McCulloch Blvd N.
Lake Havasu City, AZ 86403
Email to: purchasing@lhcaz.gov

# SECTION I - TECHNICAL SPECIFICATIONS

**ITB NO.: B21-WWTP-500088**

**ITB TITLE: NORTH REGIONAL WASTEWATER TREATMENT PLANT CHAIN & RAKE BAR SCREEN SYSTEM AND WASHPACTOR REPLACEMENT**

**LOCATION:** 7001 Whelan Drive, Lake Havasu City, AZ 86404

Replacement of two chain & rake bar screen systems and a washpactor/compactor that shall receive the flow of wastewater from the Lake Havasu City (LHC) owned Influent Pump Station (IPS). The screenings and solids will discharge into the new trough to a new washpactor/compactor with sufficient wash water to allow them to flow to washpactor. The screens will be installed into an existing channel as shown on provided drawings and accommodate the flow pattern through the screen belt. Both will have local start/stop, emergency stop, and main variable frequency drive (VFD) control panel that shall be located in the screens building MCC. Both screens will also be sequenced to start washpactor/compactor at the start of belt/band. The City will install the equipment using either City crews or will issue a separate contract with a non-City contract crew.

**A.** Design Requirements

| | | |
|---|---|---|
| 1. | Peak flow capacity | 14MGD |
| 2. | Channel width | 4’-0” |
| 3. | Channel depth | 9’-0” |
| 4. | Downstream water depth at max. flow | 4’-0” |
| 5. | The angle-of-inclination shall be 75 degrees from horizontal. | |
| 6. | Maximum head loss at max. flow | 6.36” |
| 7. | Actual head loss at max. flow | 12” (50% blinding) |
| 8. | The fine horizontal opening maximum | 3mm |
| 9. | The coarse horizontal opening maximum | 15MM |
| 10. | Spray bar wash water quality | Effluent |

**B.** Washpactor/compactor Design Requirements

1. Wet Screening Capacity: 210 cubic feet per hour.
2. Sluice Water Capacity: 200gmp
3. Screenings Volume Reduction: 50% minimum.
4. Screening Weight Reduction: 70% minimum.
5. Solids Concentration of Discharge: 45% minimum.
6. Free Organic Content of Discharge: Less than 5%.
7. Washpactor system shall be capable of handling screenings at a steady continuous rate during the period of peak loading.
8. The discharge of Washpactor shall be, in appearance, a light gray color with no visible fecal matter and no free water.
9. Washed screenings must pass the EPA Paint Filter Test.

**C.** Screens shall be complete with the following items

1. Course screens or approved equal.
2. Class I Division I electric geared motor for the screen drive.
3. Wash water and or screen cleaning system.
4. All frame and hardware shall be 316 stainless steel or approved equal.
5. All local control shall be NEMA 7 enclosures.
6. Other appurtenance required by the screen manufacturer.

**D.** Control Panel

1. Contractor/Manufacturer may use existing ventilated cabinet if all required VFD's and other equipment has sufficient and required space or they may provide their own.
2. Access to all manual, automatic controls, and touch screen (s) shall be on the front of control panel door.
3. Variable Frequency Drives (VFD) shall be Allen Bradley, Cutler Hammer, or approved equal.

**E.** Sequence of Operation

1. Hand Position-Motor runs continuously by its locally mounted start/stop and can be manually adjusted.
2. Off Position-Motor(s) is stopped.
3. Auto Position will either select differential or time by respective screen operation switch.
4. Differential level sequence is sensed by existing Siemens Hydro Ranger 200 transducers mounted in the channel upstream and downstream of the screens.
5. The screens will start on set level differential.
6. The speed of the screen rotation will be proportional to the level in the channel.
7. Time sequence is by internal timers in PLC (Allen Bradley Compact Logix, or approved equal). When screen sits idle for a set period of time, a cycle will be started and the screen will run for an adjustable period of time. The speed of the rotation will be preset.
8. When any of the screens is operating, the washpactor and compactor will start.
9. It is also recommended that the screens stop when there is a failure alarm on the washpactor.
10. All level and timer adjustments will be made by an Operator at the control panel through some type of HMI (Allen Bradley Panelview Plus/Panelview 800 (10")) touch screen on the front of the panel door.
11. A PDF of the existing plans has been included as Reference 1.
12. Pictures have been included as Reference 2.
13. Original design specs included as Reference 3.
14. Bidders including common spare parts with their bid proposal shall provide a current price list and the discount off the price list offered to LHC, if any. If no price list discount is indicated, LHC will consider this to mean no discount is offered.

**F.** Project Schedule

1. Manufacturer shall supply on-site factory assistance during installation, start-up, and training of up to five days for each of the two (2) screens and five days for the washpactor/compactor. **The City will install the equipment. Equipment delivery required prior to June 30, 2021**. Installation will be performed during the summer season (no later than July 31, 2021) when the wastewater treatment plant's influent and effluent flow is at decreased levels. Installation shall be performed during normal business hours, Monday through Friday. No weekend work will be performed. It is the City's intent to schedule installation as one consecutive set of dates until completion with no break in the schedule. The exception will be weekends when no work will be performed. Technical Installation Assistance shall be provided. Rate based on each 5-day work week and a per day rate for technical installation assistance. Rate shall include all travel and related costs for work to be performed at the City's project site.

**G.** Deliverable-based Progress Payments

1. Progress payments may be requested. The City will only consider progress payments if contract completion shall exceed thirty (30) calendar days from initial delivery of the equipment.
    a. In no case will any payment be made as an advance.
    b. The contractor may submit an invoice for progress payment by deliverable upon acceptance by the City's department representative (or designee).
    c. No progress payment will be made for any deliverable that is deemed deficient, unsatisfactory, or otherwise unacceptable to the City.
    d. Payments will be made by the City in response to a properly submitted invoice in accordance with the actual equipment received and/or services performed.
    e. Final payment will be made upon acceptable completion of all contract requirements.

## SECTION J - BIDDER SIGNATURE PAGE

**ITB NO.: B21-WWTP-500088**

**ITB TITLE: NORTH REGIONAL WASTEWATER TREATMENT PLANT CHAIN & RAKE BAR SCREEN SYSTEM AND WASHPACTOR REPLACEMENT**

By signature below, the Bidder certifies that the specifications, general provisions and the attached Contract Terms and Conditions have been carefully examined. If the bid is accepted, Bidder agrees to contract with Lake Havasu City to furnish the item(s) and/or services in the manner and time herein prescribed and according to all the requirements set forth.

The Bidder hereby certifies that Bidder:

1) Has not discriminated against disadvantaged, minority, or women small business enterprises in obtaining any required subcontracts in accordance with A.R.S.

2) Acknowledge receipt of Addendum(s). The modifications to the bid documents noted therein have been considered and all costs thereto are included in the bid sum.

   Addendum # _____ Dated _____
   Addendum # _____ Dated _____
   Addendum # _____ Dated _____
   Addendum # _____ Dated _____

3) Complete, sign and return the attached bid documentation:

   Cover Title/Page
   Section J - Bidder Signature Page
   Section K - Bid Price Schedule
   Section L - Exceptions to the Specifications
   Section M - References

4) The term "CONTRACT DOCUMENTS" includes, but may not be limited to, the documents incorporated into this **ITB No.:** B21-WWTP-500088, **ITB TITLE:** NORTH REGIONAL WASTEWATER TREATMENT PLANT CHAIN & RAKE BAR SCREEN SYSTEM AND WASHPACTOR REPLACEMENT, issued on September 2, 2020, as follows:

   A. Invitation To Bid
   B. Instructions To Bidders
   C. Contract Terms and Conditions
   D. Employment Eligibility Verification Form
   E. Additional Terms and Conditions
   F. Insurance Requirements
   G. Intent to Bid Notification
   H. No Bid Notification
   I. Technical Specifications
   J. Bidder Signature Page
   K. Bid Price Schedule
   L. Exceptions to Specifications
   M. References

5) The Bidder may withdraw a bid at any time prior to the bid opening by providing written request to the Procurement Official or designee. However, all bids shall be irrevocable for ninety (90) calendar days from the day of the bid opening.

6) Discount payment terms are _____% _____ days/net _____ days.

7) Fuel Surcharges: All pricing shall be protected from increase for three (3) months from the execution date of this Contract, Purchase Order, or Notice to Proceed. Fuel charges shall not be allowed unless disclosed at the time the Vendor/Contractor submits a response to a solicitation and subsequently closed at the stated date and time. Fuel surcharges will only be allowed if the price per gallon of gasoline/diesel fuel increases more than 20 percent (20%) from the gasoline/diesel fuel prices posted on the day the solicitation closed. The index used for diesel prices is posted weekly on Highway Diesel Prices for the Rocky Mountain Region. The index for gasoline prices is Weekly Retail Gasoline/Diesel Prices for the Rocky Mountain Region. Both are posted each Monday by the Energy Information Agency at:
http://tonto.eia.doe.gov/oog/info/gdu/gasdiesel.asp
http://tonto.eia.doe.gov/dnav/pet/pet_pri_gnd_dcus_nus_w.htm

If applicable, please complete the following:
a. Fuel surcharge required: ☐ Yes ☐No
b. Type of fuel: ☐ Gas, or ☐ Diesel
c. Fuel required for delivery (one way): _____ Gallons.
d. Solicitation Closing Date _____ (mm/dd/year) / Fuel Price __ __.__ __ Dollars/Cents.

The Bidder agrees that pursuant to Section 34-253 of the Arizona Revised Statutes, the undersigned certifies that neither he/she nor anyone associated with vendor's company listed below has directly, or indirectly, entered into any agreement, participated in any collusion or otherwise taken any action in restraint of free competitive bidding in connection with this procurement. Further, vendor agrees to provide a notarized "NO COLLUSION AFFIDAVIT" if so required by the City, at a future date.

**NAME/TITLE** _____

**SIGNATURE** _____

**ARIZONA TAX ID:** _____

**FEDERAL TAX ID:** _____

**NAME OF FIRM:** _____

**ADDRESS:** _____

**PHONE:** _____ **FAX**: _____

**EMAIL:** _____

**SEAL, IF BID BY CORPORATION:**

**FAILURE TO SIGN AND SUBMIT THIS FORM SHALL BE CAUSE FOR BID REJECTION**

## SECTION K - BID PRICE SCHEDULE

**ITB NO.: B21-WWTP-500088**

**ITB TITLE: NORTH REGIONAL WASTEWATER TREATMENT PLANT CHAIN & RAKE BAR SCREEN SYSTEM AND WASHPACTOR REPLACEMENT**

**BIDDER AGREES TO PROVIDE ALL REQUIRED EQUIPMENT, MATERIAL, FREIGHT AND / OR LABOR AS SPECIFIED IN BID DOCUMENTS HEREIN FOR THE FOLLOWING PRICES AS LISTED:**

| QUANTITY | DESCRIPTION | UNIT PRICE | EXTENDED PRICE |
|---|---|---|---|
| | **Firm Fixed Bid Price Schedule to include:** | | |
| **1 LS** | **Equipment Purchase per the requirements identified herein.** | | |
| **15 DAYS** | **Manufacturer shall supply on-site factory assistance during installation, start-up and training of up to five days, including travel, for each piece of equipment.**<br><br>**Provide a detailed project price outlining the components of your project estimate.**<br><br>**Bidder shall specify if the Tentative Project Schedule identified within the above instructions and specification section is acceptable or shall quote an alternate schedule.** | | |
| | **FREIGHT CHARGE**<br>**FOB: LAKE HAVASU CITY DELIVERY SITE** | | |
| | **GRAND TOTAL** | | **$** |
| | **TAX EXEMPT** | | **TAX EXEMPT** |

**DELIVERY SCHEDULE:** _____
(required prior to June 30, 2021)

**WARRANTY** (if applicable): _____

**VENDOR'S NAME:** _____

**FAILURE TO SUBMIT THIS FORM SHALL BE CAUSE FOR BID REJECTION**

## SECTION L - EXCEPTIONS TO SPECIFICATIONS

**ITB NO.: B21-WWTP-500088**

**ITB TITLE: NORTH REGIONAL WASTEWATER TREATMENT PLANT CHAIN & RAKE BAR SCREEN SYSTEM AND WASHPACTOR REPLACEMENT**

Please list all deviations from specifications contained herein and state in the space provided below. Please note item number and description for which you are listing the deviations. Unless an exception is noted below, the City shall assume that all minimum requirements have been met or exceeded.

| ITEM NO. | DESCRIPTION |
|---|---|
| | |
| | |
| | |
| | |
| | |
| | |
| | |
| | |
| | |
| | |
| | |
| | |
| | |
| | |
| | |
| | |
| | |
| | |

**VENDOR'S NAME:** _____

**FAILURE TO SUBMIT THIS FORM MAY BE CAUSE FOR BID REJECTION**

## SECTION M - REFERENCES

**ITB NO.: B21-WWTP-500088**

**ITB TITLE: NORTH REGIONAL WASTEWATER TREATMENT PLANT CHAIN & RAKE BAR SCREEN SYSTEM AND WASHPACTOR REPLACEMENT**

List similar wastewater treatment facilities within the southwestern states of Arizona, Nevada, Utah or New Mexico where your organization has provided the same or similar equipment within the past five years.

1. Agency/Company _____
   Phone/Fax _____
   Contact(s) & Title(s) _____
   Email(s) _____

2. Agency/Company _____
   Phone/Fax _____
   Contact(s) & Title(s) _____
   Email(s) _____

3. Agency/Company _____
   Phone/Fax _____
   Contact(s) & Title(s) _____
   Email(s) _____

4. Agency/Company _____
   Phone/Fax _____
   Contact(s) & Title(s): _____
   Email(s) _____

5. Agency/Company _____
   Phone/Fax _____
   Contact(s) & Title(s) _____
   Email(s) _____

The references indicated above will be current contacts responsible for purchasing or the end user of the item bid.

**VENDOR'S NAME:** _____

**FAILURE TO SUBMIT THIS FORM MAY BE CAUSE FOR BID REJECTION**

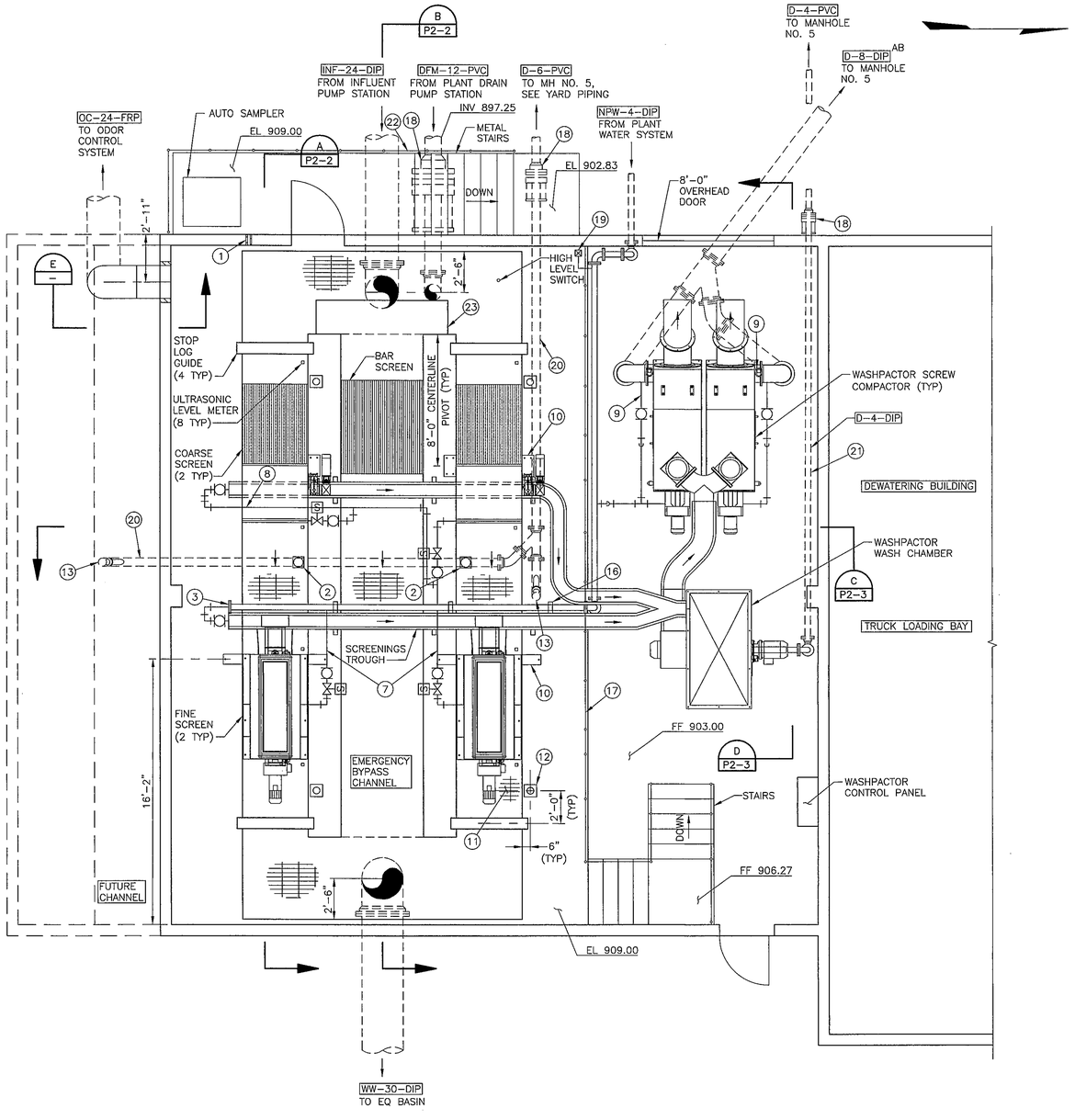


PLAN

SCALE: 1/4"=1'-0"

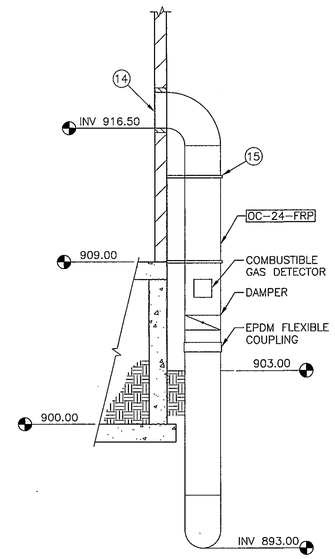


SECTION E

SCALE: 1/4"=1'-0"

## KEYED NOTES

1. 2" PVC SLEEVE IN WALL FOR AUTO SAMPLER TUBING
2. MUD VALVE AND COVER PER DETAIL 144 (TYP)
3. BLIND FLANGE
4. NOT USED
5. WALL PENETRATION PER DETAIL 105
6. PIPE HANGER PER DETAIL 131 AT 6'-0"
7. 1 1/2" SCHEDULE 80 PVC NON-POTABLE WATER LINE TO SCREEN, CONNECTIONS TO BE MADE PER MANUFACTURER'S RECOMMENDATIONS WITH ENGINEER'S APPROVAL REGARDING ROUTING (TYP)
8. 3/4" SCHEDULE 80 PVC NON-POTABLE WATER LINE TO SCREENINGS TROUGH (TYP)
9. 1/2" SCHEDULE 80 PVC NON-POTABLE WATER LINE TO SCREW COMPACTOR, CONNECTIONS TO BE MADE PER MANUFACTURER'S RECOMMEDATIONS
10. SCREEN MANUFACTURER TO SUBMIT DESIGN OF ANCHOR SYSTEM FOR APPROVAL BY ENGINEER PRIOR TO FABRICATION (TYP)
11. CONTRACTOR TO COORDINATE WITH MANUFACTURER FOR CLEARANCE BETWEEN SCREENS AND GRATING (TYP)
12. DAVIT CRANE MOUNT (TYP) CONTRACTOR TO VERIFY LOCATIONS OF DAVIT CRANE MOUNT IN RELATION TO STOP LOG LOCATIONS WITH CRANE MANUFACTURER PRIOR TO INSTALLATION
13. CLEANOUT PER LHC STANDARD DETAIL 9
14. 12" AFF COVER OPENING WITH 1/2" BIRD SCREEN
15. VERTICAL SWAY BRACE PER DETAIL 139, TWO PLACES MINIMUM
16. FLUSH MOUNT PIPE SUPPORT PER DETAIL 126 (TYP)
17. HANDRAIL PER DETAIL 108 (TYP)
18. PVC TO DIPxPE ADAPTER (TYP)
19. WALL MOUNTED YARD HYDRANT PER DETAIL 120
20. 6" DRAIN, SLOPE AT 0.04 FT/FT
21. 4" DRAIN, SLOPE AT 0.04 FT/FT
22. TRANSITION FROM STEEL HANDRAIL TO ALUMINUM HANDRAIL AT TOP OF STAIRS
23. 8'-0"x 2'-0"x 8" FRP OVERFLOW WEIR AND SUPPORT

"AS-BUILT" DRAWINGS

This drawing was modified to reflect construction revisions based on the records kept and provided by the Contractor.

Finished as-built measurements and elevations were not obtained by the Engineer. All information reported must be verified by site measurements.

ENGINEER: [signature]

DATE: 4/30/08

WILSON ENGINEERS, LLC
Phoenix, Arizona


In Association with MALCOLM PIRNIE

WILSON ENGINEERS
9633 South 48th Street, Suite 290
Phoenix, Arizona 85044-5658
Phone: (480) 893-8860


LAKE HAVASU CITY, ARIZONA
NORTH REGIONAL WASTEWATER TREATMENT PLANT
SCREENS BUILDING PLAN

CITY PROJECT NO. SS1860
WCEA NO. X4001

Design: MLA | Drawn: KJG | Checked:
Date: 7/05 | WCEA Project No.: X4001

| Revision | Date | Description | By |
|---|---|---|---|
| 2 | 9/05 | ADDENDUM NO. 2 | WLJ |
| | 4/08 | AS-BUILT | MLA |

THE ORIGINAL DESIGN DRAWING FOR THIS WORK WAS SEALED ON 1/20/2006 BY UDAY K. GANDHE, A REGISTERED PROFESSIONAL CIVIL ENGINEER IN THE STATE OF ARIZONA, REGISTRATION NO. 30185

Sheet No. P2-1

XREF: 40010167, WWTPSITE & TB-X4001

G:\PROJECT\X4001\CADD\ASBUILT\WCI-Phx\X4001K1-4.dwg, 5/1/2008 2:04:53 PM, mamurray, 1:1

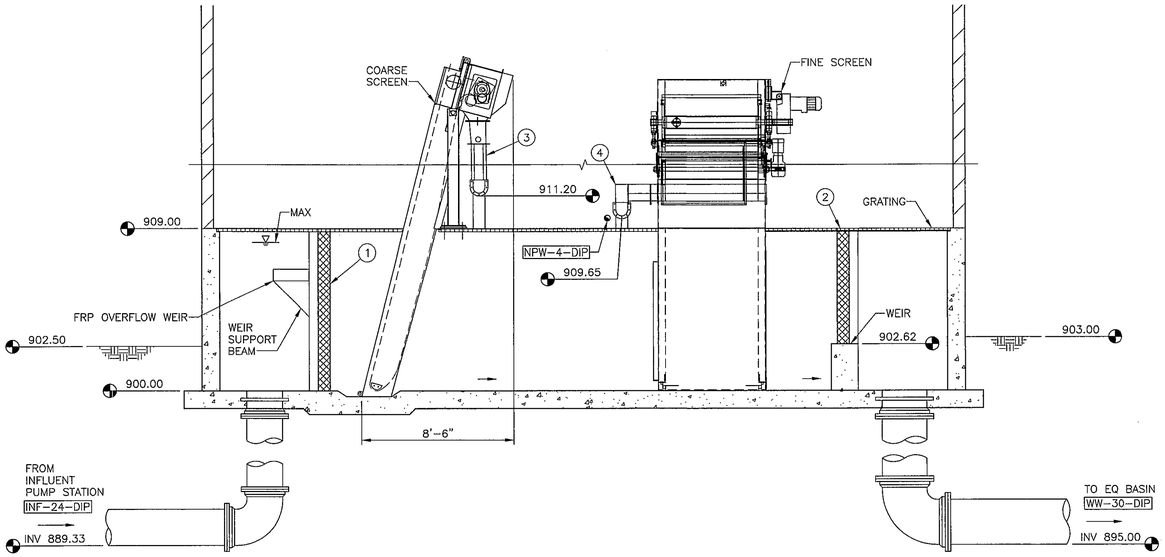


SECTION A P2-1
SCALE: 1/4"=1'-0"

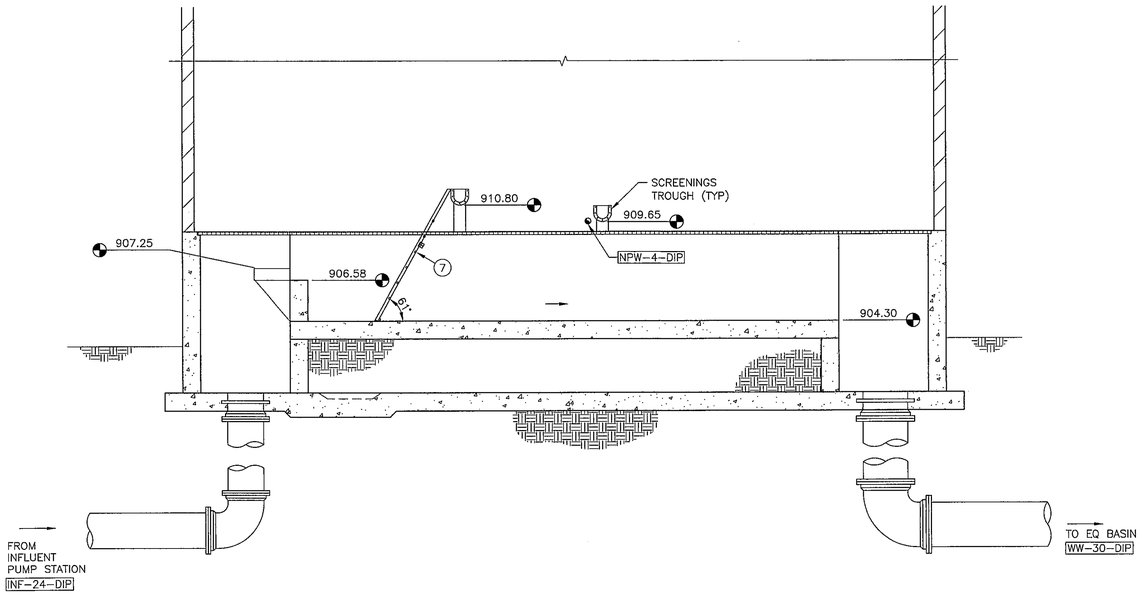


SECTION B P2-1
SCALE: 1/4"=1'-0"

## KEYED NOTES

1. STOP LOG GUIDE (TYP)
2. STOP LOG ACCESS COVER PER DETAIL 153 (TYP)
3. NEOPRENE BOOT, LENGTH AS REQUIRED (TYP)
4. 1" WIDE 316 SS BAND CLAMP (TYP)
5. 316 SS SCREENING TROUGH, SLOPE AT 0.03 FT/FT MINIMUM
6. SCREENING TROUGH FLANGES WITH NEOPRENE GASKET (TYP)
7. 3/8"x2" ALUMINUM BARS SPACED AT 3" CENTER TO CENTER

"AS-BUILT" DRAWINGS

This drawing was modified to reflect construction revisions based on the records kept and provided by the Contractor.

Finished as-built measurements and elevations were not obtained by the Engineer. All information reported must be verified by site measurements.

ENGINEER:

DATE: 4/30/08

WILSON ENGINEERS, LLC
Phoenix, Arizona

In Association with MALCOLM PIRNIE

WILSON ENGINEERS
9633 South 48th Street, Suite 290
Phoenix, Arizona 85044-5658
Phone: (480) 893-8860

LAKE HAVASU CITY, ARIZONA
NORTH REGIONAL WASTEWATER TREATMENT PLANT
SCREENS BUILDING SECTIONS

CITY PROJECT NO. SS1860
WCEA NO. X4001

| Design: MLA | Drawn: KJG | Checked: |
|---|---|---|
| Date: 7/05 | WCEA Project No.: X4001 | |

| Revision | Date | Description | By |
|---|---|---|---|
| | | | |

THE ORIGINAL DESIGN DRAWING FOR THIS WORK WAS SEALED ON 1/20/2006 BY UDAY K. GANDHE, A REGISTERED PROFESSIONAL CIVIL ENGINEER IN THE STATE OF ARIZONA, REGISTRATION NO. 30185

Sheet No. P2-2

XREF: 4001D001, 4001D126, & TB-X4001

G:\PROJECT\X4001\CADD\ASBUILT\WCI-Phx\X4001K28.dwg, 4/30/2008 11:55:08 AM, mamurray, 1:1

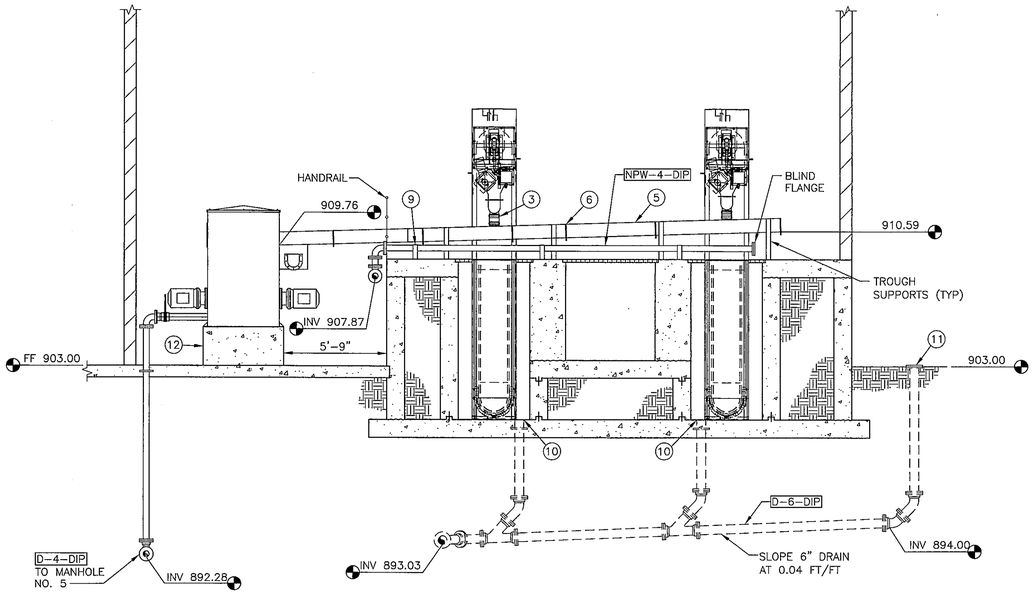


SECTION C P2-1
SCALE: 1/4"=1'-0"

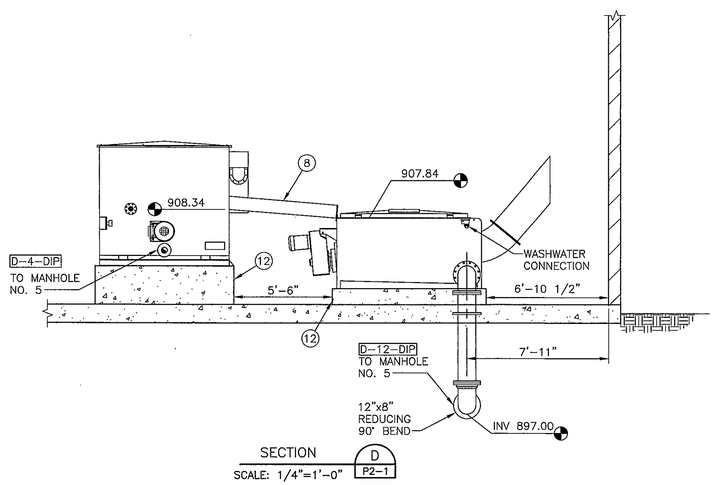


SECTION D P2-1
SCALE: 1/4"=1'-0"

## KEYED NOTES

1. STOP LOG GUIDE (TYP)
2. STOP LOG ACCESS COVER PER DETAIL 153 (TYP)
3. NEOPRENE BOOT, LENGTH AS REQUIRED (TYP)
4. 1" WIDE 316 SS BAND CLAMP (TYP)
5. 316 SS SCREENING TROUGH, SLOPE AT 0.03 FT/FT MINIMUM
6. SCREENING TROUGH FLANGES WITH NEOPRENE GASKET (TYP)
7. 3/8"x2" ALUMINUM BARS SPACED AT 3" CENTER TO CENTER
8. 316 SS SCREENING TROUGH, SLOPE AT 0.08 FT/FT MINIMUM
9. FLUSH MOUNT PIPE SUPPORT PER DETAIL 126 (TYP)
10. 6" MUD VALVE PER DETAIL 144
11. CLEANOUT PER LHC STANDARD DETAIL 9
12. EQUIPMENT SUPPORT PAD PER DETAIL 6 SHEET S19-1, ADJUST PAD HEIGHT TO MATCH EQUIPMENT ELEVATIONS AS SHOWN

"AS-BUILT" DRAWINGS

This drawing was modified to reflect construction revisions based on the records kept and provided by the Contractor.

Finished as-built measurements and elevations were not obtained by the Engineer. All information reported must be verified by site measurements.

ENGINEER: [signature]

DATE: 4/30/08

WILSON ENGINEERS, LLC
Phoenix, Arizona

In Association with MALCOLM PIRNIE

WILSON ENGINEERS
9633 South 48th Street, Suite 290
Phoenix, Arizona 85044-5658
Phone: (480) 893-8860

LAKE HAVASU CITY, ARIZONA
NORTH REGIONAL WASTEWATER TREATMENT PLANT
SCREENS BUILDING SECTIONS

CITY PROJECT NO. SS1860
WCEA NO. X4001

Design: MLA | Drawn: KJG | Checked:
Date: 7/05 | WCEA Project No.: X4001

| Revision | Date | Description | By |
|---|---|---|---|
| 2 | 9/05 | ADDENDUM 2 | WLJ |

THE ORIGINAL DESIGN DRAWING FOR THIS WORK WAS SEALED ON 1/20/2006 BY UDAY K. GANDHI, A REGISTERED PROFESSIONAL CIVIL ENGINEER IN THE STATE OF ARIZONA, REGISTRATION NO. 30185

Sheet No. P2-3

XREF: 4001D127, 4001D180 TB-X4001

G:\PROJECT\X4001\CADD\ASBUILT\WCI-Phx\X4001K4S.dwg, 5/1/2008 2:08:36 PM, mamurray, 1:1

NOTE:
VERIFY SIZE & LOCATION OF ALL OPENINGS IN CONCRETE SLABS/WALLS WITH ALL OTHER DISCIPLINES PRIOR TO START OF CONSTRUCTION

NOTE:
CONTRACTOR TO COORDINATE OPENING DIMENSIONS,TRACK EMBEDMENTS, GROUT SOCKETS AT SLUICE GATES & OPERATOR PENETRATIONS w/ APPROVED GATE MFR SHOP DWGS PRIOR TO FABRICATION SEE TYPICAL DETAILS ON SHT S 19-3 FOR REINF

NOTE:
FOR SITE LOCATION, PIPE PENETRATIONS, HANDRAIL LOCATIONS & CONCRETE FILLS (FILLETS, ETC) SEE P DWGS

NOTE:
FOR TYPICAL CONSTRUCTION JOINTS SEE TYPICAL DETAILS ON DWG S 19-1


NSB Nabar Stanley Brown, Inc.
Consulting Structural Engineers
2150 East Highland Avenue, Suite #204
Phoenix, Arizona 85016-4721
tel (602)912-9191 fax (602)912-9686

In Association with
MALCOLM PIRNIE

WILSON ENGINEERS
9633 South 48th Street, Suite 290
Phoenix, Arizona 85044-5658
Phone: (480) 893-8860


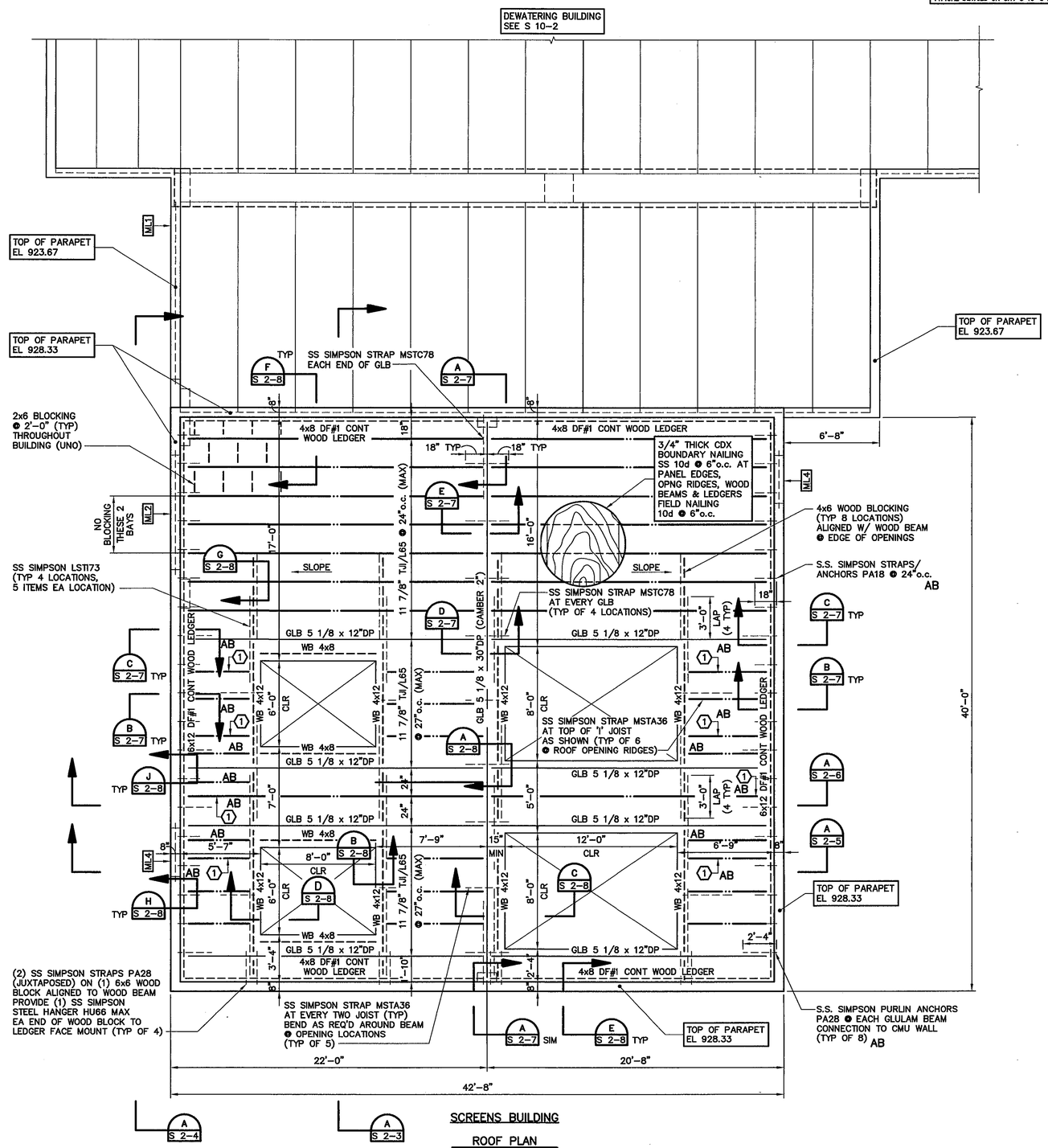


"AS-BUILT" DRAWINGS

This drawing was modified to reflect construction revisions based on the records kept and provided by the Contractor.

Finished as-built measurements and elevations were not obtained by the Engineer. All information reported must be verified by site measurements.

ENGINEER: [signature]

DATE: 05/06/08

WILSON ENGINEERS, LLC
Phoenix, Arizona

AB

⟨1⟩ = INDICATES NO STRAP AT THESE LOCATIONS

MASONRY LINTEL SCHEDULE

| MARK | DEPTH | BOTTOM REINF | TOP REINF | REMARKS |
|---|---|---|---|---|
| ML1 | 3'-4" | 2 #5 | 2 #5 | 2 #5 INTERMEDIATE @ MID-DEPTH VERT #5 @ 16" |
| ML2 | 2'-0" | 2 #5 | 2 #5 | VERT #5 @ 8" |
| ML3 | 2'-0" | 2 #5 | – | VERT #5 @ 16" |
| ML4 | 1'-4" | 2 #5 | – | VERT #5 @ 8" |

NOTE: SHORE ALL LINTELS AT 1/4 POINTS FOR 7 DAYS AFTER THE WALL IS GROUTED TO THE TOP

LAKE HAVASU CITY, ARIZONA
NORTH REGIONAL WASTEWATER TREATMENT PLANT

SCREEN BUILDING
ROOF PLAN

CITY PROJECT NO. SS1860
WCEA NO. X4001

Design: SJN | Drawn: AJE | Checked: BWM
Date: 07/05 | WCEA Project No.: X4001

| Revision | Date | Description | By |
|---|---|---|---|
| | 4/08 | AS-BUILT | SJN |

THIS DRAWING WAS ORIGINALLY SEALED ON 7/5/05
SATEESH J. NABAR
PROFESSIONAL ENGINEER (STRUCTURAL)
IN ARIZONA
REGISTRANT NO. 21877

Sheet No. S 2-2

NSB Filename: G:\2100-s\2165\Record_Drawings\4001S2-2.dwg Scale: 1:1 Plotted By: viridiana on May 06, 2008 at 7:36pm

Parkson
DANGER
Parkson
EXIT

EXIT

CAUTION
THIS EQUIPMENT
STARTS AND STOPS
AUTOMATICALLY

DANGER
Parkson

Parkson

CAUTION

DANGER

WASTEQUIP
CAUT

SECTION 11330

COARSE SCREENS

## PART 1 - GENERAL

### 1.1 SUMMARY

A. Furnish and install two automatic self-cleaning coarse screens with local control panels for the Screens Building complete and operable, as shown on the Drawings and as specified herein.

B. The CONTRACTOR shall have the responsibility to coordinate the installation of the equipment. Any revisions necessary shall be subject to the ENGINEER'S review and approval.

### 1.2 REFERENCES

A. American Society of Testing Material (ASTM) 240.

### 1.3 SYSTEM DESCRIPTION

A. The system to be furnished and installed shall include two fully automatic self-cleaning coarse screens and enclosed discharge chutes. The equipment shall be of the latest design and shall be fabricated of materials and in a fashion that will fully perform the functions described below.
   1. The coarse screens shall be located indoors in the Screens Building in a Class 1 Division 1 rated area. The coarse screens and associated equipment located in the Screen Building shall be rated for explosion proof service.
   2. The heavy-duty, fully automatic mechanical self-cleaning, coarse screens shall be suitable for installation and operation in a flow channel measuring 4 feet wide by 9 feet deep, as measured from the base of the screen to the level at which it is supported. The angle-of-inclination shall be 75 degrees from horizontal. There shall be a 0.292 foot recess (notch) in the channel floor to accommodate low flow periods.
   3. The opening from which the unit discharges screenings from its enclosure shall be at least 5.70 feet above the elevation at which its support legs are mounted. The screen manufacturer shall provide a 316 stainless steel fabricated 3 feet long 6-inch diameter outlet, as shown on the Drawings, for connecting the screen discharge to the screenings trough.
   4. The total discharge height of each coarse screen, as measured from its base to the screenings discharge point, shall be 15 feet.
   5. Each coarse screen shall be capable of passing a maximum of 14.0 MGD of wastewater in a channel 4 feet wide. The loss of head at a maximum flow of clean water, with a downstream water depth of 4 feet, shall not exceed 6.36-

inches of water and not exceed 12-inches of water with 50% blockage of the screen. The loss of head at a maximum flow of clean water, with a downstream water depth of 5.5 feet, shall not exceed 3-inches of water and not exceed 12-inches of water with 50% blockage of the screen.

6. Each coarse screen shall have 0.73 square feet of contact surface area per square foot of wetted filtration belt frontal surface. Each coarse screen shall be capable of presenting a clean filtration surface to the oncoming liquid stream at all times during continuous operation. The coarse screens shall be capable of intermittent operation in order to form a mat of material to provide maximum trash removal. The coarse screen manufacturer shall furnish four ultrasonic level meters, two for each coarse screen. Ultrasonic level meters shall be as specified in Section 13420, Primary Sensors and Field Instruments. The coarse screen unit shall start automatically when the differential level, as detected by the ultrasonic level meters, exceeds an operator adjustable value. The ultrasonic level meters shall be mounted in accordance with the screen manufacturers recommendations and as shown on the Drawings.
7. Each coarse screen shall be capable of capturing and transporting screenings out of the channel and into the screenings trough up to a maximum of 1.628 cubic yards of screenings per hour.
8. Each coarse screen shall provide dual filtration of the oncoming liquid stream in order to minimize compaction of captured debris and minimize head loss through the screen. A two dimensional grid forming coarse openings shall be the first portion of the screen filtration belt that the flow stream contacts as it passes through the screen. The coarse horizontal openings shall be a maximum of 8 mm. The coarse vertical openings shall be a maximum of 15 mm. The fine horizontal openings shall be a maximum of 3 mm.
9. The filter belt assembly shall be cleaned via the interaction of the filter elements with the rotating brush assembly, and spray wash. No other mechanical devices capable of jamming (i.e., doctor blade) shall be used to remove the captured material. The drive mechanism shall be protected from the trash stream in order to insure that the screen runs smoothly without jamming. The driving force must be transmitted to clean, trash free components to avoid mistracking or binding which could render the screen inoperable, requiring manual cleaning and realignment.
10. The spray wash shall be located in the top of the unit inside the filtration belt path. The spray wash shall direct water from behind the elements to help remove trash and debris from the screen and direct the screenings into the discharge of the unit. Flow of spray water shall be controlled by a solenoid valve rated for Class 1 Division 1 service and shall conform to the requirements of Section 11295, Hydraulic Valves. The coarse screen manufacturer shall supply one solenoid valve for each coarse screen. The water from the spray wash system shall enter the discharge of the unit with the screenings to help transport the screenings through the screenings trough to the drain. The spray wash shall be capable of directing a minimum of 20 gpm of water utilizing a water supply at a minimum pressure of 40 psi to 70

psi. Spray washes located outside of the filtration belt path or other auxiliary cleaning devices that could cause trash to be dropped into the interior of the filtration belt are not allowed, as this would require periodic cleaning of this area and could cause jamming of the filter belt.

11. The coarse screen unit shall rest on the top of the channel walls and the bottom of the channel. No mounting or fastening of the unit to the sidewalls or the bottom of the channel will be allowed. Routine service shall be possible with the screen in the channel.

## 1.4 SUBMITTALS

A. Shop Drawings: Submit for approval the following:

1. Letters of Certification of Compliance on materials, equipment, etc.
2. Final Certified Drawings showing outline dimensions, foundation layout or mounting information, and other pertinent dimensions.
3. Field erection instructions, assembly drawings and/or diagrams, detailed reference drawing lists, and lists of erection details.
4. Shop Detail Drawings showing individual sub-assemblies and fabricated pieces with material specifications and other applicable data.
5. Installation instructions, operating and/or service manuals, and all other data pertinent to operating or servicing the complete apparatus. Preventative maintenance instructions and recommended frequency.
6. Schematic and wiring diagrams of power, control, and piping systems. A detailed description of operation shall be included for each diagram to describe all modes of operation of the system indicated. Where the integrated system requires interlocking and control of other components in normal operation, these components shall be included in the description of operation.
7. General bulletins and product literature describing complete apparatus including operating principles and fundamentals.
8. Service data sheets showing design performance, utility requirements, etc., as applicable to the specific duty for which the equipment is furnished.
9. Curves and/or data for overall range of operation from minimum to maximum capacity or load, showing capacity or load, utilities motive medium required, total or incremental differential head, and other pertinent information applicable to the equipment or its component assemblies.
10. Materials of construction of all components.
11. Renewal parts list with diagrammatic or cross-section Drawings showing part identification. Material analysis or trades designation for each significant part is to be noted on parts lists or on a separate sheet.
12. Bearing manufacturer's standard identification and/or interchangeable number for all anti-friction bearings in the equipment proper and its accessory items.
13. A local control panel engraved nameplate legend.
14. Warranty in accordance with Paragraph 1.7 of this Specification.

B. Shop Test Results: Submit results of routine factory motor tests.

C. Field Test Results: Submit a written report giving the results of the required field tests.

D. Manufacturer's Reports: Submit written report of the results of each visit by a manufacturer's serviceman, including purpose and time of visit, tasks performed and results obtained.

E. Operation and Maintenance Manuals: Submit complete Operation and Maintenance Manuals in conformance with the Operation and Maintenance Manuals Section of Section 01300, Submittals.

## 1.5 QUALITY ASSURANCE

A. Manufacturer's Qualifications:
   1. Manufacturer shall have a minimum of five years experience of producing substantially similar equipment. Only products that have a proven reliability record of at least five years in operation shall be considered acceptable.
   2. In order to assure uniform quality, ease of maintenance and minimal parts storage, it is the intent of these Specifications that all equipment called for under this Section shall be supplied by a single manufacturer.

B. Each coarse screen shall be factory assembled and tested for a minimum of eight hours prior to delivery, and shall be delivered to the site fully assembled (other than the motor/reducer unit, discharge chute and support legs). It shall be capable of being set in place and field erected by the CONTRACTOR with minimal field assembly.

## 1.6 DELIVERY, STORAGE, AND HANDLING

A. Deliver materials to the site to ensure uninterrupted progress of the Work. Deliver anchor bolts and anchorage devices, which are to be embedded in cast-in-place concrete, in ample time not to delay that Work.

B. Store materials to permit easy access for inspection and identification. Keep steel members off the ground, using pallets, platforms, and other supports. Protect steel members and packaged materials from corrosion and deterioration.

C. Store mechanical equipment in covered storage off the ground and prevent condensation.

## 1.7 WARRANTY

A. The manufacturer shall warrant the coarse screens being supplied to the OWNER against defects in workmanship and material for a period of one year under

normal use, operation, and service after acceptance of the system installation by the OWNER. The warranty shall cover parts and labor and shall be in printed form.

## PART 2 - PRODUCTS

### 2.1 MANUFACTURERS

A. Manufacturers:
   1. Parkson Corporation.
   2. JWC Environmental.
   3. Or approved equal.

### 2.2 EQUIPMENT CONSTRUCTION

A. Materials of Construction: All moving wetted parts, all wetted parts on which the moving parts ride, and/or all filter belt components under guiding, bearing or driving loads including, but not limited to, the shafts, links, and guide rails shall be fully corrosion-resistant and shall be made of 316 stainless steel or wear resistant heat treated 400 Series stainless steel except as noted below:
   1. The screening elements shall be high impact plastic, which will not shred trash or cause jamming because of the self-relieving nature of the material. Designs that use metallic elements are not acceptable.
   2. The roller and bushings shall be of 400 Series heat treated stainless steel with a minimum Rockwell of 39C hardness for reduced wear and long life.
   3. The frame and support legs, which are stationary, shall be 3/16-inch thick 316 stainless steel.
   4. The main drive shaft and sprockets shall be constructed of 316 stainless steel.
   5. The take-up screws shall be constructed of 316 stainless steel.
   6. The brush shaft shall be 316 stainless steel.
   7. The front seal brush and rotating brush shall have nylon bristles.
   8. The side plates shall be Phenolic or suitable high impact plastic.
   9. The side seals shall be made of neoprene rubber with 316 stainless steel backing plates.
   10. All nuts and bolts shall be 316 stainless steel.
   11. The discharge chute shall be 316 stainless steel.
   12. All other appurtenances including chains, brush sprockets, bearing housings, etc., shall be of manufacturers standard coated material.

B. Mechanical Details:
   1. The screening rollers shall be minimum 1-3/4-inch diameter and shall ride on 1/2-inch thick 316 stainless steel rails. A submerged curved 1/2-inch thick stainless steel rail shall be provided at the foot of the screen. No submerged bearings or sprockets are allowed in order to eliminate maintenance required on submerged components.

2. To limit deflection, the filter shafts shall have a minimum diameter of 3/4-inch, be spaced on maximum 4-inch centers in the travel direction of the belt, and shall be made of 316 stainless steel.
3. The tension of the moving screen belt assembly shall be completely supported by a stainless steel link chain. The chain must connect the filter shaft ends on both sides of the belt assembly so that no weight is supported by the filter elements. The chain assembly shall provide a minimum cross-section of 0.144-in.$^2$ at the weakest point of any complete, individual link.
4. The portion of the screen which is above the channel shall be fitted with 14 gauge covers constructed of 316 stainless steel. The covers shall be hinged for unobstructed access to the screening belt and any affected maintenance items.
5. The motor shall be connected to a hollow shaft helical worm type reducer equipped with anti-friction bearings and designed in accordance with AGMA recommendations for 24 hours, Class II service.

C. Motors:
1. Motors shall conform to the requirements of Section 11100, Electric Motors.
2. The units shall be driven by 1/2 horsepower, explosion proof, 460 volt, 3-phase, 60 Hz TEFC motors suitable for Class 1 Division 1 environments (explosion-proof).
3. The motor shall have a service factor of 1.15 at an ambient temperature of 40° C.
4. Overload protection shall be provided by an electrical overload device (Tsubaki Shock Relay Model TSB50 or approved equal) that senses motor current draw.

## 2.3 CONTROLS

A. The coarse screen local control panel shall be supplied by the coarse screen manufacturer, the panel will be rated NEMA 12 and conform to the requirements of Section 13430, Panels and Enclosures, and Section 13440, Panel Instruments and Devices; provide for the functionality as described in Section 13491, Control Descriptions; and as shown on the Electrical and Instrumentation Sheets, and conform to the requirements as described herein.
1. Size the panel to include and include, at a minimum, the following instruments and/or devices:
   a. HAND/OFF/AUTO Selector Switch for each coarse screen.
   b. START/STOP Button for each coarse screen.
   c. Running Light for each coarse screen (GREEN).
   d. Fail to Start Alarm Indicator Light for each coarse screen (RED).
   e. Run Time Indicator for each coarse screen.
   f. Electrical Overload/ Fail Indicator Light for each coarse screen (AMBER).
   g. Electrical Overload/Fail Reset Pushbutton for each coarse screen.

h. One upstream and one down stream level display for each coarse screen. Read out shall be in feet.
i. Other devices as deemed necessary by the coarse screen manufacturer for control or monitoring the operation of each coarse screen.

2. Dry contacts shall be provided for the Instrumentation Sheets.
3. Provide six additional spare dry contacts.
4. Provide main breaker disconnect, fuse, fuse block, and motor controllers.
5. Provide engraved nameplates for all devices.
6. Provide an engraved nameplate that identifies the local control panel with the panel name.
7. Provide engraved nameplates that identify each piece of equipment to be controlled by the local control panel with the name of the equipment.
8. The coarse screen manufacturer shall submit, during Shop Drawing review, an engraved nameplate legend that must be approved by the ENGINEER. The ENGINEER shall approve or reject the nameplate legend at the ENGINEER'S discretion.
9. Provide all required wiring, electrical interlocks, relays and other miscellaneous devices.

B. The local control panel shall be factory tested prior to shipment.

C. The coarse screen local control panel shall be mounted outside of the Screen Building as shown on the Drawings.

D. The coarse screen manufacturer shall furnish two pushbutton panels, one for each coarse screen unit, rated for Class 1 Division 1 explosion proof service, to be mounted next to each coarse screen unit in the Screens Building. The pushbutton panel shall have the following buttons:
1. START.
2. STOP.
3. Emergency Stop.

## 2.4 SPARE PARTS

A. Furnish and deliver the following spare parts, identical and interchangeable with the original parts, carefully boxed or packaged and plainly marked for reordering:
1. 40 - Filter Elements.
2. 20 - Side Plates.
3. 40 - Snap Rings, 3/4-inch diameter.
4. 20 - Snap Rings, 15/16-inch diameter.
5. 8 - Rotating Brush Elements.

B. CONTRACTOR shall store and safeguard spare parts until completion of the Work, at which time they shall be inventoried, delivered, and placed in an area designated by the OWNER.

## PART 3 - EXECUTION

### 3.1 FIELD PREPARATION AND PAINTING

A. Finish painting and field preparation shall be performed as specified in Section 09900, Painting.

B. The CONTRACTOR shall touch-up all shipping damage to the paint as soon as the equipment arrives on the job site.

C. Prior to the assembly all stainless steel bolts and nut threads shall be coated with a non-seizing compound by the CONTRACTOR.

### 3.2 INSTALLATION

A. Installation shall be in strict accordance with Contract Documents and requirements of the manufacturer's written instructions and Shop Drawings. It is the CONTRACTOR'S responsibility to verify the accuracy of all necessary dimensions in the field to ensure compatibility with the Specifications and equipment.

### 3.3 MANUFACTURER'S FIELD SERVICE

A. A factory trained representative shall be provided for installation supervision, start-up and test services as specified in Section 01650, Starting of Systems, and operation and maintenance personnel training services as specified in Section 01650, Starting of Systems. The representative shall make a minimum of two visits, minimum eight hours on-site for each visit, to the site. The first visit shall be for assistance in the installation of equipment. The second visit shall be for checking the completed installation and start-up of the system and for instruction of operations and maintenance personnel.

B. Upon completion of installation by the CONTRACTOR and start-up of the equipment by the manufacturer's field service representative, the equipment shall be operated for a minimum of eight hours and in the presence of the ENGINEER to ensure that all clearances, vibrations, tracking and motor operating characteristics are within acceptable limits and verify that the coarse screen units conform to requirements. Manufacturer's representative shall revisit the job site as often as necessary until all trouble is corrected and the OWNER accepts the system installation.

C. Reports: Submit report by manufacturer of each visit to the site that provides complete information on time, schedule, tasks performed, persons contacted, problems corrected, test results, training, instruction and all other pertinent information.

D. All costs incurred by the manufacturer's field service representative, including travel, lodging, meals, and incidentals shall be considered as included.

END OF SECTION

SECTION 11329

WASHPACTOR

## PART 1 - GENERAL

### 1.1 SCOPE OF WORK

A. Furnish all labor, equipment, materials, and incidentals required to completely install and place into operation a washpactor system capable of meeting the design requirements specified herein.

B. The unit shall be furnished and installed with a washing tank, washing impeller, two screw compactors, and all the necessary accessory equipment and auxiliaries, whether specifically mentioned in these Specifications or not, and as required for an installation incorporating the highest standards for the type of service specified, including field technician representation during start up of the unit, and instruction of the OWNER'S personnel in the care, operation and maintenance of all equipment.

### 1.2 RELATED SECTIONS

A. Drawings and General Provisions of the Contract, including General and Supplementary Conditions apply to this Section.

B. Section 01300, Submittals.

C. Section 01640, Materials and Equipment.

D. Section 01650, Starting of Systems.

E. Division 5, Metals.

F. Section 09900, Painting.

G. Section 11100, Electric Motors.

H. Division 16, Electrical.

### 1.3 SUBMITTALS

A. See Section 01300, Submittals, for submittal procedures and requirements. Submit for approval the following:

1. Letters of Certification of Compliance on materials, equipment, etc. Final Certified Drawings showing outline dimensions, foundation layout or mounting information, and other pertinent dimensions.
2. Final Certified Drawings showing outline dimensions, foundation layout or mounting information, and other pertinent dimensions.
3. Field erection instructions, assembly drawings and/or diagrams, detailed reference drawing lists, and lists of erection details.
4. Shop Detail Drawings showing individual sub-assemblies and fabricated pieces with material specifications and other applicable data.
5. Installation instructions, operating and/or service manuals, and all other pertinent to operating or servicing the complete apparatus.
6. Preventative maintenance instructions and recommended frequency.
7. Schematic and wiring diagrams of power, control, and piping systems. A detailed description of operation shall be included for each diagram to describe all the modes of operation of the system indicated. Where the integrated system requires interlocking and control of other components in normal operation, these components shall be included in the description of operation.
8. General bulletins and product literature describing complete apparatus including operating principles and fundamentals.
9. Service data sheet showing design performance, utility requirements, etc., as applicable to the specific duty for which the equipment is furnished.
10. Materials of construction for all components.
11. Renewal parts list with diagrammatic or cross-section drawings showing part identification. Material analysis or trades designation for each significant part is to be noted on parts lists or on a separate sheet.

B. Shop Test Results: Submit results of routine factory motor tests.

C. Field Test Results: Submit a written report giving the results of the required field screen testing.

D. Manufacturer's Reports: Submit written reports of each visit by a manufacturer's serviceman, including purpose and time of visit, tasks performed, and results obtained.

E. Operation and Maintenance Manuals: Submit complete Operation and Maintenance Manuals in conformance with the Operation and Maintenance Manual Section of Section 01300, Submittals.

## 1.4 REFERENCE STANDARDS

A. American Iron and Steel Institute (AISI).

B. American National Standards Institute (ANSI).

C. American Society for Testing and Materials (ASTM).

D. American Bearing Manufacturers Association (ABMA). American Gear Manufacturers Association (AGMA).

E. National Electrical Manufacturers Association (NEMA).

F. National Fire Protection Association (NFPA).

G. Underwriters Laboratory (UL).

## 1.5 QUALITY ASSURANCE

A. All equipment covered by these Specifications shall be furnished by one manufacturer, and shall be complete including motor and appurtenances. The equipment shall be the product of a single manufacturer regularly engaged in the production of equipment for the specified use. The manufacturer shall have the sole responsibility for the proper functioning of the equipment as furnished.

B. Manufacturers regularly engaged in the manufacture of the washer compactor equipment as specified herein and who can demonstrate equipment of this specified design, in actual service for a period of not less than eight years will be considered as acceptable manufacturers.

## 1.6 WARRANTY

A. The equipment shall be warranted for a period of one year from the date of start up to be free from defects in workmanship, design or material. If the equipment should fail during the warranty period due to a defective part(s), it shall be replaced in the machine and the unit(s) restored to service at no expense to the OWNER.

## 1.7 DESIGN REQUIREMENTS

A. The System Shall Meet the Following Parameters:
   1. Wet Screenings Capacity: 210 cubic feet per hour.
   2. Sluice Water Capacity: 200 gpm.
   3. Screenings Volume Reduction: 50% minimum.
   4. Screenings Weight Reduction: 70% minimum.
   5. Solids Concentration of Discharge: 45% minimum.
   6. Free Organic Content of Discharge: Less than 5%.

B. The washpactor system shall be capable of handling screenings at a steady continuous rate during the period of peak loading.

C. The discharge of the washpactor shall be, in appearance, a light gray color with no visible fecal matter and no free water.

D. Washed screenings must pass the EPA Paint Filter Test.

## PART 2 - PRODUCTS

### 2.1 MANUFACTURERS

A. Manufacturers:
   1. Parkson Corporation.
   2. JWC Environmental.
   3. Or approved equal.

### 2.2 GENERAL

A. Like items of materials/equipment shall be the end products of one manufacturer in order to provide standardization for appearance, operation, maintenance, spare parts, and manufacturer's service.

B. Nameplates with the name of the manufacturer, equipment model number, and all other pertinent data shall be affixed to each unit at a visible and accessible location.

C. All anchor bolts shall be furnished by the manufacturer and be installed in accordance with the manufacturer's instructions and recommendations.

### 2.3 EQUIPMENT

A. Washing Tank:
   1. The washing tank shall be a one piece fabrication manufactured from 304 stainless steel designed to receive screenings from the discharge point of influent screens via a flume.
   2. The washing impeller assembly shall be attached to the tank utilizing a hinge system to allow easy removal for maintenance. See Paragraph 2.3.B for information on the washing impeller.
   3. An easily removable FRP cover shall be provided over the entire top of the washing tank.
   4. The washing tank shall include an attachment point for a low level conductive electrode. The electrode will prevent the impeller from operating in a dry condition.
   5. The volume of the tank shall be such that the water and solids are retained for long enough to ensure that all fecal material is liquefied. The washing tank

shall be, at minimum, 7 feet 3-inches in length, 4 feet 5-inches in width, and 5 feet 5-inches in height.

B. Washing Impeller:
   1. The impeller assembly shall be recessed into the side panel of the washing tank to ensure that no abrasive solids make contact with the impeller face.
   2. The impeller assembly is to be connected directly to the drive motor shaft.
   3. The impeller assembly shall be made of two components.
      a. The back half of the assembly shall be a stainless steel casting integrating the drive shaft.
      b. The front half of the assembly is the impeller face, containing the vanes and is made from a Ni-hard casting.

C. Screw Compactor:
   1. The two screws shall be a rotating, shafted, single flight design with a diameter of 20-inches and a length of 6.5 feet.
   2. Each screw shall rotate within a 304 stainless steel, 2 mm perforated trough which collects screenings and allows water to pass and discharge back to the upstream side of the Hi-Flow screen.
   3. Hard wearing nylon brushes will be affixed to the flights of each screw with adjustable clamps and shall act to prevent material blocking the perforated trough.
   4. Each screw shall be supported at the drive end by an independent thrust and radial load bearing.
   5. Each screw shall be driven by a shaft mounted helical geared motor.
   6. At the entrance to the de-watering cone there shall be a 0.5-inch NPT solenoid valve and water connection to provide rinse water onto the screenings prior to compaction. The water requirement shall be 16 gpm @ 25 psi.
   7. Each screw shall be supported by a thick walled UHMW sleeve at the de-watering end. This sleeve shall prevent oscillation of the screw, maintaining contact with the trough at all times and eliminating chances of trough wearing. The sleeve will also act to initiate the formation of the compacted plug of screenings.
   8. The compacted screenings shall be elevated to the discharge point by a 304 stainless steel tubular outlet chute angled at 50 degrees from the horizontal.
   9. Each outlet chute shall be larger in diameter than that of the screw to prevent the compacted screenings from becoming lodged in the chute.

## 2.4 MOTORS

A. General:
   1. Motors shall be as specified herein and shall also conform to Section 11100, Electric Motors.
   2. The motors shall not be overloaded under any normal operating conditions.

B. Impeller Drive:
   1. The washing impeller drive motor is hollow shaft mounted to the impeller drive shaft.
   2. The motor shall be a maximum of 15 horsepower and of 4-pole configuration, designed for a 460 volt, 3-phase, 60 Hz suitable for explosion proof (Class 1 Division 1) environments.
   3. The motor shall have a service factor of 1.15 at an ambient temperature of 40° C.

C. Screw Drive:
   1. The screw compactor drive shall be a helical geared motor shaft mounted via a torque arm to a bracket fitted on the main compactor body.
   2. Each motor shall be no larger than 7.5 horsepower, 460 volt, 3-phase, 60 Hz, suitable for explosion proof (Class 1 Division 1) environments.
   3. Each motor shall have a service factor of 1.15 at an ambient temperature of 40° C.

## 2.5 ELECTRICAL DEVICES AND CONTROLS

A. Electrical Devices: The following electrical devices shall be supplied with the equipment.
   1. A single, normally closed solenoid valve shall be provided with each washpactor unit to allow a water rinse of the screenings prior to compaction.
      a. The solenoid valve shall be rated for Class 1 Division 1 service and shall conform to the requirements of Section 11295, Hydraulic Valves.
   2. The washpactor tank is equipped with one low level electrode to prevent dry operation of the unit.

B. Controls: The following controls shall be supplied with the screening handling equipment.
   1. Provide a totally enclosed, front access type, 460 volt control panel with a NEMA 47, 316 stainless steel enclosure suitable for a Class 1 Division 1 environment (explosion-proof).
   2. All controls shall be manufactured by a UL 508 certified company.
   3. The control panel wiring shall be neatly cabled and supported in non-flammable wiring raceways.
   4. All control devices and switches required for good quality operation shall be supplied in the control panel.
   5. Provide main breaker disconnect, fuse, fuse block, and motor controllers.

C. Operation:
   1. Washpactor:
      a. The control panel shall be equipped to handle both of the following conditions.
         1) Condition 1:

a) When the screens operate, a volt free (N/O contact) signal will be supplied to the washpactor control panel. On receipt of this signal the washpactor shall start "OPERATING". At the loss of this signal the washpactor shall enter its "SWITCHING OFF" mode. Any specified remote equipment may require control signals at these times.

b) Washpactor "OPERATING" shall mean that the impeller motor runs and the compactor motor runs. The washwater solenoid valve is open.

c) On entering the "SWITCHING OFF" mode, (i.e., when the screen stops) the washpactor facilities shall "overrun" for a period determined by a 0 - 5 minute timer. When this timer times out, the compactor and washwater solenoid valve shall overrun for a further period of 0 - 5 minutes.

d) The washpactor impeller shall be allowed to stop and start periodically within its "OPERATING" mode. The stop and start shall be controlled by an adjustable 0 - 5 minute "impeller run" timer and an adjustable 0 - 60 second "impeller dwell" timer. Only the impeller is to be controlled by these timers. The screen operation, launder/conveyor feed and compactor drive ***shall not*** be influenced by these timers.

2) Condition 2:

a) The screens work independently of washpactor.

b) The washpactor shall be controlled on an intermittent basis by a series of timers. An interval timer 0 - 60 minutes with accurate adjustment shall initiate the "OPERATING" of the system. A run timer, 0 - 10 minutes, shall determine the "OPERATING" period of the machine. When the "OPERATING" period elapses, the "SWITCHING OFF" mode shall commence and also indicate to the remote conveying system to cease operating, whilst the overrun timer, 0 - 5 minutes, (referred to in Paragraph C, Condition 1) stops the washpactor mechanisms.

c) The washpactor impeller shall be allowed to stop and start periodically within its "OPERATING" mode. The stop and start shall be controlled by an adjustable 0 - 5 minutes "impeller run" timer and an adjustable 0 - 1 minute "impeller dwell" timer. Only the impeller is to be controlled by these timers. The screen operation, launder/conveyor feed and compactor drive ***shall not*** be influenced by these timers.

b. Low Level Probe Controller:

1) The control panel shall be fitted with conductivity type plug in level controllers, as supplied by Hawker Electronics or other approved supplier, with adjustable sensitivity from 100 ohms to 20,000 ohms approx, with 0-10 dial selector and a switching differential better

than 5% of sensitivity setting (e.g., better than 50 ohms to 100 ohms).

2) The power supply is to be 110 volts or 240 volts AC, 50-60 Hz with a permitted variation of +10% -20% and an operating range of -10° C to +50° C.

3) A double pole change over relay contact to be fitted 4 amp rating @ 240 volts @ 80% PF on non-inductive load. Relay to be energised indication by L.E.D. The fail-safe high/low selection by internal switch. The unit to be complete with a universal 11 pin socket base complete with clips.

c. The following conditions shall be sensed by the control panel.

1) Low level in washing tank (Stop Washpactor).

2) Impeller drive tripped (Stop Washpactor).

3) Compactor drive tripped (Stop Washpactor).

## 2.6 SPARE PARTS

A. The following spare parts shall be included. Spare parts shall be supplied in a package clearly marked and shall contain no items required for initial operation of the equipment.

1. One impeller front face.
2. One screw brush set.

# PART 3 - EXECUTION

## 3.1 INSTALLATION

A. Install equipment in accordance with the approved Shop Drawings and the manufacturer's installation instructions.

B. Final electrical connections are to be made by the electrical contractor.

## 3.2 FIELD QUALITY CONTROL

A. A manufacturer provided service person shall be on site for two trips, each lasting a minimum of two days to perform the following services.

1. Equipment Installation:
   a. Inspect the completed installation and note any deficiencies.
   b. Complete and provide the OWNER with a copy of an installation report.
2. Equipment Start-up:
   a. Assist in placing the system of equipment into proper operation making any necessary recommendations and adjustments.
   b. Provide OWNER with copy of start-up report.
3. Equipment Training:

a. Instruct plant personnel in the operation and maintenance of the equipment system specified herein.
b. Training sessions shall include, but not be limited to, a classroom session and a hands-on session.

## 3.3 FIELD TESTING

A. Washer Compactor Testing:
1. After completion of start-up and sufficient time to form a compacted product, each washer compactor shall be tested by the CONTRACTOR to ensure proper operation in accordance with this Specification. The following test procedures shall be followed.
   a. A 4 lb to 6 lb sample of the end product will be taken in sample bags for laboratory analysis. A separate sample shall be taken each day for seven days and the same tests, as described below, shall be performed for each sample.
   b. The bags shall be opened in the laboratory. The contents shall be shredded and mixed without loss of water or other sample material. Sub-samples of 0.3 lb to 0.5 lb shall be isolated and the remaining sample discarded appropriately. One sub-sample shall be used for dry solids determination. The second sub-sample shall be analyzed for BOD based upon the following procedure.
      1) The sample shall be washed five successive times with one liters of de-ionized water each time. Between each wash the sample is drained through a 30 micron mesh sieve. The combined washings are analyzed for total BOD according to the method published by HMSO entitled "five day bio chemical oxygen demand ($BOD_5$) second edition 1988".
      2) The results are reported as mg of BOD per gram of dry solids.
2. Each unit shall pass if ALL of the following criteria are met for all seven samples taken.
   a. The minimum dry solids content of each unit's washed screenings product is 45%.
   b. The maximum $BOD_5$ of each unit's washed screenings product is 20 mg/g of dry solids.
3. The following actions shall be taken if a washer compactor does not meet all the above criteria.
   a. Unit shall be put into proper operating condition at the cost of the manufacturer.

END OF SECTION