FINAL CONSTRUCTION PLANS FOR THE
CONSTRUCTION OF VADOSE ZONE WELL 8 & FACILITIES

LHC PROJECT 107015
OCTOBER 2023

SHEET NUMBER	DRAWING NO	TITLE
1	G-1	TITLE SHEET, SHEET INDEX, AND VICINITY MAP
2	G-2	GENERAL NOTES
3	G-3	ABBREVIATIONS
4	G-4	CIVIL NOTES AND LEGEND
5	G-5	MECHANICAL NOTES AND LEGEND
6	C-1	VADOSE WELL SITE PLAN
7	C-2	PLAN AND PROFILE
8	C-3	DETAILS
9	C-4	WELL 8 AND 9 CONSTRUCTION
10	M-1	PLAN AND SECTION
11	M-2	DETAILS
12	E-1	OVERALL ELECTRICAL SITE PLAN
13	E-2	ENLARGED PLANS, DETAILS
14	E-3	ELECTRICAL ONE-LINE DIAGRAMS
15	E-4	ELECTRICAL DETAILS
16	I-1	P&ID DIAGRAMS, DETAILS, ELECTRICAL SYMBOL LEGEND

MAYOR:	CAL SHEEHY
VICE MAYOR:	DAVID LANE
CITY COUNCIL:	NANCY CAMPBELL JIM DOLAN MICHELE LIN CAMERON MOSES JENI COKE
CITY MANAGER:	JESS KNUDSON
CITY ENGINEER:	GREG FROSLIE, P.E.
PROJECT MANAGER:	JASON HART

BASIS OF BEARING:

HORIZONTAL DATUM: COORDINATES ARE MODIFIED (GROUND) AZ STATE PLANE COORDINATES - CENTRAL ZONE (NAD 83).

VERTICAL DATUM: ELEVATIONS ARE NAVD 88.

VICINITY MAP
NTS

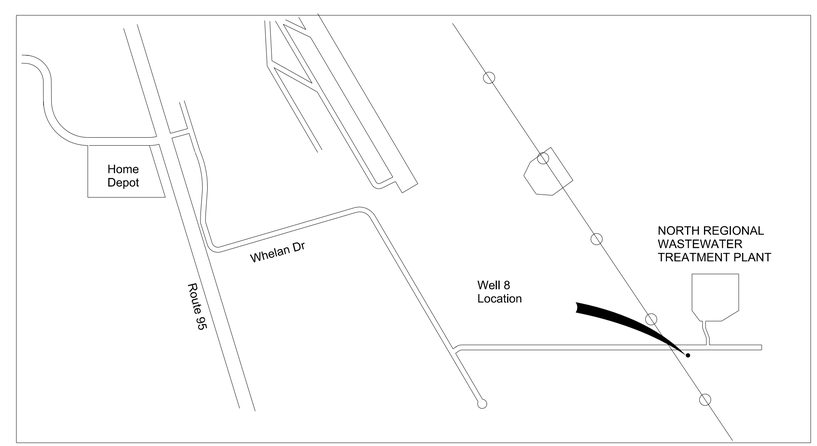

N
LOCATION MAP
NTS

Registered Professional Engineer (Civil) CERTIFICATE NO. 46507 KEVIN M. BRAL Date Signed 10/30/2023 ARIZONA U.S.A.
Expires 06/30/2025

NO.	DATE	REVISION	BY	APVD

DSGN R STURN | DR S METCALF | CHK R EDWARDS | APVD K BRAL

© JACOBS 2020. ALL RIGHTS RESERVED.

TRICO ENGINEERING, LLC
231 SWANSON AVENUE, STE. A
LAKE HAVASU CITY, AZ 86403
(928) 855-1150
WWW.TRICOENGINEERINGLLC.COM

Jacobs ENGINEERS INC
PHOENIX, AZ 85085
(602) 322-5000
WWW.JACENGINEERS.COM

CONSTRUCTION OF VADOSE ZONE WELL 8 & FACILITIES
107015
LAKE HAVASU CITY
2330 MCCULLOCH BLVD N.
LAKE HAVASU CITY, ARIZONA 86403
(928) 855-2116

GENERAL
TITLE SHEET, SHEET INDEX, AND VICINITY MAP

REUSE OF DOCUMENTS: THIS DOCUMENT, AND THE IDEAS AND DESIGNS INCORPORATED HEREIN, AS AN INSTRUMENT OF PROFESSIONAL SERVICE, IS THE PROPERTY OF JACOBS AND IS NOT TO BE USED, IN WHOLE OR IN PART, FOR ANY OTHER PROJECT WITHOUT THE WRITTEN AUTHORIZATION OF JACOBS.

VERIFY SCALE
BAR IS ONE INCH ON ORIGINAL DRAWING.
0 1"

DATE	OCTOBER 2023
PROJ	D3412600
DWG	G-1
SHEET	1 of 16

GENERAL CONSTRUCTION NOTES

1. ALL WORK ON THIS PROJECT SHALL BE PERFORMED IN ACCORDANCE WITH APPLICABLE FEDERAL, STATE AND LOCAL LAWS, ORDINANCES, AND REGULATIONS CONCERNING CONSTRUCTION SAFETY AND HEALTH.
2. THE CONTRACTOR IS RESPONSIBLE FOR OBTAINING ALL REQUIRED CONSTRUCTION PERMITS AND APPROVALS OF LIKE KIND PRIOR TO START OF CONSTRUCTION.
3. THE LOCATION OF BURIED UTILITIES ARE BASED UPON INFORMATION PROVIDED TO THE ENGINEER BY OTHERS AND MAY NOT REFLECT ACTUAL FIELD CONDITIONS. EXISTING BURIED UTILITIES SHALL BE VERIFIED BY THE CONTRACTOR PRIOR TO CONSTRUCTION. THE CONTRACTOR SHALL USE ANY MEANS APPROVED BY THE ENGINEER/PROJECT MANAGER TO LOCATE UNDERGROUND UTILITIES INCLUDING, BUT NOT LIMITED TO, ELECTRONIC LOCATING EQUIPMENT AND/OR POT HOLING. ANY DAMAGE TO ANY OTHER UTILITIES AND/OR COLLATERAL DAMAGE CAUSED BY THE CONTRACTOR SHALL BE THE FULL RESPONSIBILITY OF THE CONTRACTOR.
4. EXISTING FENCING THAT IS NOT DESIGNATED FOR REMOVAL SHALL NOT BE DISTURBED. ANY FENCING THAT IS DISTURBED OR ALTERED BY THE CONTRACTOR SHALL BE RESTORED TO ITS ORIGINAL CONDITION AT THE CONTRACTOR'S EXPENSE. IF THE CONTRACTOR DESIRES TO REMOVE FENCING TO ACCOMMODATE CONSTRUCTION ACTIVITIES, THE CONTRACTOR SHALL OBTAIN THE OWNER'S WRITTEN PERMISSION BEFORE FENCE IS REMOVED. CONTRACTOR SHALL RESTORE THE FENCE TO ITS ORIGINAL CONDITION AT THE EARLIEST OPPORTUNITY TO THE SATISFACTION OF THE OWNER. WHILE ANY FENCING IS REMOVED, THE CONTRACTOR SHALL BE SOLELY RESPONSIBLE FOR SECURITY OF THE SITE UNTIL THE FENCE IS RESTORED.
5. AT THE END OF EACH WORK DAY, THE CONTRACTOR SHALL CLEAN AND PICK UP THE WORK AREA TO THE SATISFACTION OF THE ENGINEER/PROJECT MANAGER. AT NO TIME SHALL THE WORK BE LEFT IN A MANNER THAT COULD ENDANGER THE WORKERS OR THE PUBLIC.
6. THE CONTRACTOR SHALL BE RESPONSIBLE FOR SAFETY OF ALL WORK, INCLUDING WORK WITHIN TRENCHES WHICH SHALL BE IN ACCORDANCE WITH THE OCCUPATIONAL SAFETY AND HEALTH ACT (OSHA).
7. REFERENCES MADE TO STANDARD SPECIFICATIONS AND STANDARD DRAWINGS REFER TO THE CITY OF LAKE HAVASU, ENGINEERING DIVISION STANDARD DETAILS
8. THE CONTRACTOR SHALL NOT INSTALL ITEMS AS SHOWN ON THESE PLANS WHEN IT IS OBVIOUS THAT FIELD CONDITIONS ARE DIFFERENT THAN SHOWN IN THE PLANS. SUCH CONDITIONS SHALL BE BROUGHT TO THE ATTENTION OF THE ENGINEER IN A TIMELY MANNER. IN THE EVENT THE CONTRACTOR DOES NOT NOTIFY THE ENGINEER IN A TIMELY MANNER, THE CONTRACTOR ASSUMES FULL RESPONSIBILITY AND EXPENSE FOR ANY REVISIONS NECESSARY, INCLUDING ENGINEERING DESIGN FEES.
9. EXISTING SITE IMPROVEMENTS WHICH ARE DAMAGED OR DISPLACED BY THE CONTRACTOR SHALL BE REMOVED AND REPLACED BY THE CONTRACTOR AT THE CONTRACTOR'S EXPENSE. REPAIRS SHALL BE APPROVED BY THE OWNER PRIOR TO CONSTRUCTION OF THE REPAIRS. REPAIRS SHALL BE ACCEPTED BY THE OWNER PRIOR TO FINAL PAYMENT.
10. PRIOR TO BEGINNING ANY CONSTRUCTION ACTIVITIES WITHIN ADJACENT RIGHT-OF-WAYS OR WITHIN PROPERTY NOT OWNED BY THE OWNER OF THE PROJECT SITE, THE CONTRACTOR SHALL ASSURE THAT ALL PERMITS AND PERMISSIONS REQUIRED HAVE BEEN OBTAINED IN WRITING.
11. THE CONTRACTOR SHALL NOTIFY THE OWNER AT LEAST SEVEN (7) DAYS BEFORE BEGINNING ANY CONSTRUCTION ACTIVITY THAT COULD DAMAGE OR DISPLACE SURVEY MONUMENTS, PROPERTY CORNERS, OR PROJECT BENCHMARKS SO THESE ITEMS MAY BE RELOCATED.
12. ANY SURVEY MONUMENTS, PROPERTY CORNERS, OR BENCHMARKS THAT ARE NOT IDENTIFIED FOR RELOCATION ARE THE RESPONSIBILITY OF THE CONTRACTOR TO PRESERVE, PROTECT, RELOCATE OR REPLACE. RELOCATION OR REPLACEMENT OF THESE ITEMS SHALL BE DONE BY THE OWNER'S SURVEYOR AT THE EXPENSE OF THE CONTRACTOR.
13. WHEN ABUTTING NEW PAVEMENT TO EXISTING PAVEMENT, CUT EXISTING PAVEMENT EDGE TO A NEAT, STRAIGHT LINE AS NECESSARY TO REMOVE ANY BROKEN OR CRACKED PAVEMENT AND MATCH NEW PAVEMENT ELEVATION TO EXISTING.
14. ALL UTILITIES AND UTILITY SERVICE LINES SHALL BE INSTALLED AND APPROVED PRIOR TO PAVING.
15. THE CONTRACTOR SHALL WORK WITHIN EXISTING RIGHT-OF-WAY, PLANNED RIGHT-OF-WAY, OR PLANNED OPEN SPACE AS INDICATED ON THE PLANS. EQUIPMENT TRAFFIC OUTSIDE THESE LIMITS SHALL NOT BE PERMITTED WITHOUT WRITTEN PERMISSION OF THE OWNER, CONSTRUCTION MANAGER, OR ENGINEER.
16. THE CONTRACTOR SHALL LOCATE UTILITYS AT LEAST FIVE WORKING DAYS BEFORE BEGINNING CONSTRUCTION. AFTER THE UTILITIES ARE SPOTTED, THE CONTRACTOR SHALL EXPOSE ALL PERTINENT UTILITIES TO VERIFY THEIR VERTICAL AND HORIZONTAL LOCATION. IF A CONFLICT EXISTS BETWEEN EXISTING UTILITIES AND PROPOSED CONSTRUCTION, THE CONTRACTOR SHALL NOTIFY THE ENGINEER SO THAT THE CONFLICT CAN BE RESOLVED WITH MINIMAL DELAY.
17. THE CONTRACTOR SHALL EXERCISE DUE CARE TO AVOID DISTURBING ANY EXISTING UTILITIES, ABOVE OR BELOW GROUND. UTILITIES THAT ARE DAMAGED BY CARELESS CONSTRUCTION SHALL BE REPAIRED OR REPLACED AT THE CONTRACTOR'S EXPENSE.
18. THE CONTRACTOR SHALL COORDINATE ANY REQUIRED UTILITY INTERRUPTIONS WITH THE OWNER AND AFFECTED UTILITY COMPANY A MINIMUM OF FIVE (5) WORKING DAYS BEFORE THE INTERRUPTION.
19. THE CONTRACTOR SHALL MAINTAIN A RECORD DRAWING SET OF PLANS AND PROMPTLY LOCATE ALL UTILITIES, EXISTING OR NEW, IN THEIR CORRECT LOCATION, HORIZONTAL AND VERTICAL. THIS RECORD SET OF DRAWINGS SHALL BE MAINTAINED ON THE PROJECT SITE AND SHALL BE AVAILABLE TO THE OWNER AND ENGINEER AT ANY TIME DURING CONSTRUCTION. RECORD INFORMATION SHALL INCLUDE HORIZONTAL AND VERTICAL COORDINATE CALLOUTS, LINE SIZES, LINE TYPES, BURIAL DEPTHS, AND ALL OTHER PERTINENT INSTALLATION INFORMATION. IN ADDITION ALL ITEMS THAT ARE INSTALLED EXACTLY AS DESIGNED SHALL BE NOTED AS SUCH.
20. THE CONTRACTOR SHALL PROVIDE ALL REQUIRED TRAFFIC CONTROL PLANS AND TRAFFIC CONTROL EQUIPMENT. ALL SIGNS, BARRICADES, CHANNELIZATION DEVICES, SIGN FRAMES AND ERECTION OF SUCH DEVICES SHALL CONFORM TO THE REQUIREMENTS OF "MANUAL OF UNIFORM TRAFFIC CONTROL DEVICES FOR STREETS AND HIGHWAYS" LATEST EDITION. TRAFFIC CONTROL PLANS SHALL BE APPROVED BY THE CITY PRIOR TO CONSTRUCTION.

EROSION CONTROL, ENVIRONMENTAL PROTECTION, AND STORM WATER POLLUTION PREVENTION

A. THE CONTRACTOR SHALL CONFORM TO ALL LOCAL, AND FEDERAL DUST AND EROSION CONTROL REGULATIONS. THE CONTRACTOR SHALL PREPARE AND OBTAIN ANY DUST CONTROL OR EROSION CONTROL PERMITS FROM THE APPROPRIATE REGULATORY AGENCIES.

B. THE CONTRACTOR SHALL ENSURE THAT NO SOIL ERODES FROM THE SITE ONTO ADJACENT PROPERTY BY CONSTRUCTION OF TEMPORARY EROSION CONTROL BERMS OR INSTALLING SILT FENCES AT THE PROPERTY LINES (OR LIMITS OF CONSTRUCTION WHERE DESIGNATED) AND WETTING SOIL TO PREVENT IT FROM BLOWING.

C. ALL WASTE PRODUCTS FROM THE CONSTRUCTION SITE, INCLUDING ITEMS DESIGNED FOR REMOVAL, CONSTRUCTION WASTE, CONSTRUCTION EQUIPMENT WASTE PRODUCTS (OIL, GAS, TIRES, ETC.), DRILLING MUD AND WATER, GARBAGE, GRUBBING, EXCESS CUT MATERIAL, VEGETATIVE DEBRIS, ETC. SHALL BE APPROPRIATELY DISPOSED OF OFFSITE AT NO ADDITIONAL COST TO THE OWNER. IT SHALL BE THE CONTRACTOR'S RESPONSIBILITY TO OBTAIN ANY PERMITS REQUIRED FOR HAUL OR DISPOSAL OF WASTE PRODUCTS. IT SHALL BE THE CONTRACTOR'S RESPONSIBILITY TO ENSURE THAT THE WASTE DISPOSAL SITE COMPLIES WITH APPROPRIATE REGULATIONS REGARDING THE ENVIRONMENT, ENDANGERED SPECIES, AND ARCHAEOLOGICAL RESOURCES.

D. THE CONTRACTOR SHALL BE RESPONSIBLE FOR THE CLEANUP AND REPORTING OF SPILLS OF HAZARDOUS MATERIALS ASSOCIATED WITH THE CONSTRUCTION SITE. HAZARDOUS MATERIALS INCLUDES GASOLINE, DIESEL FUEL, MOTOR OIL, SOLVENTS, CHEMICALS, PAINT, ETC. WHICH MAY BE A THREAT TO THE ENVIRONMENT. THE CONTRACTOR SHALL REPORT THE DISCOVERY OF PAST OR PRESENT SPILLS TO THE ENGINEER.

E. THE CONTRACTOR SHALL COMPLY WITH ALL APPLICABLE REGULATIONS CONCERNING SURFACE AND UNDERGROUND WATER. CONTACT WITH SURFACE WATER BY CONSTRUCTION EQUIPMENT AND PERSONNEL SHALL BE MINIMIZED. EQUIPMENT MAINTENANCE AND REFUELING OPERATIONS SHALL BE PERFORMED IN AN ENVIRONMENTALLY SAFE MANNER IN COMPLIANCE WITH CITY, COUNTY, STATE, AND EPA REGULATIONS.

F. THE CONTRACTOR SHALL COMPLY WITH ALL APPLICABLE REGULATIONS CONCERNING CONSTRUCTION NOISE AND HOURS OF OPERATION AS STATED IN THE SPECIFICATIONS OR IMPOSED BY THE OWNER OR COUNTY AUTHORITIES.

SECTION / DETAIL DESIGNATIONS

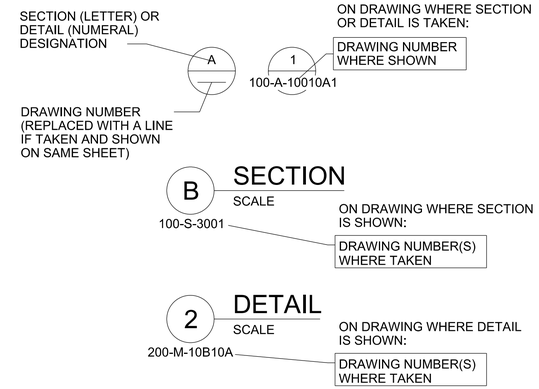

DRAWING TITLE
SCALE

ON DRAWING WHERE ONLY A TITLE IS REQUIRED WITH NO REFERENCE (eg: ELEVATIONS)

SECTION CALLOUT WHERE SECTION IS ON THE SAME SHEET AND CUT EXTENDS TO A FIXED LIMIT

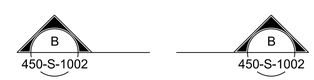

SECTION CALLOUT WHERE SECTION IS ON ANOTHER SHEET AND CUT EXTENDS THROUGHOUT ENTIRE SHEET

1 — GRID LINE INDICATOR

1 — KEYNOTE NUMBER

1 — REVISION / ADDENDA NUMBER

N — NORTH ARROW; CAN BE MODIFIED TO INCLUDE MAGNETIC NORTH ALONG WITH PROJECT NORTH

DESIGN DETAIL DESIGNATION

NOTES:

1. ALL DESIGN DETAILS ARE TYPICAL AND MUST BE USED IF DESIGN DETAIL DESIGNATION IS NOT SHOWN
2. THE TERM STANDARD DETAIL, OR A FORM OF IT, IS SYNOMONOUS WITH DESIGN DETAIL. THE DESIGN DETAILS REPRESENT THE CHARACTER AND NATURE OF THE WORK REQUIRED THROUGHOUT THE PROJECT. ALL ASSOCIATED WORK SHALL BE IN ACCORDANCE WITH THE DESIGN DETAILS SHOWN WHETHER THE DETAILS ARE SPECIFICALLY REFERENCED OR NOT.

Registered Professional Engineer (CIVIL) CERTIFICATE NO. 18507 KEVIN M. DRAL Date Signed 10/30/2023 ARIZONA U.S.A.
Expires 06/30/2025

NO.	DATE	REVISION	BY	APVD

DSGN R STURN | DR S METCALF | CHK R EDWARDS | APVD K BRAL

© JACOBS 2020. ALL RIGHTS RESERVED.

TRICO ENGINEERING, LLC
231 SWANSON AVENUE, SUITE A
LAKE HAVASU CITY, AZ 86403
(928) 854-0403
WWW.TRICOENGINEERINGLLC.COM

ENGINEERS INC
PHOENIX, AZ 85085
(602) 494-5600
WWW.JACENGINEERS.COM

CONSTRUCTION OF VADOSE ZONE WELL 8 & FACILITIES 107015
LAKE HAVASU CITY
2330 MCCULLOCH BLVD N.
LAKE HAVASU CITY, AZ 86403
(928) 855-2116

LAKE HAVASU CITY, ARIZONA • INCORPORATED 1978

REUSE OF DOCUMENTS: THIS DOCUMENT, AND THE IDEAS AND DESIGNS INCORPORATED HEREIN, AS AN INSTRUMENT OF PROFESSIONAL SERVICE, IS THE PROPERTY OF JACOBS AND IS NOT TO BE USED, IN WHOLE OR IN PART, FOR ANY OTHER PROJECT WITHOUT THE WRITTEN AUTHORIZATION OF JACOBS.

Jacobs

GENERAL
GENERAL NOTES

VERIFY SCALE
BAR IS ONE INCH ON ORIGINAL DRAWING.
0 — 1"

DATE	OCTOBER 2023
PROJ	D3412600
DWG	G-2
SHEET	2 of 16

ABBREVIATIONS

AB	ANCHOR BOLT, ABOVE
AC	ALTERNATING CURRENT
AC	ASPHALTIC CONCRETE
ACI	AMERICAN CONCRETE INSTITUTE
ACP	ASBESTOS CEMENT PIPE
ADDL	ADDITIONAL
ADJ	ADJACENT
AFD	ADJUSTABLE FREQUENCY DRIVE
AFF	ABOVE FINISHED FLOOR
AGGR	AGGREGATE
AISC	AMERICAN INSTITUTE OF STEEL CONSTRUCTION
AL	ALUMINUM
ALTN	ALTERNATE
APPROX	APPROXIMATE
APVD	APPROVED
ARCH	ARCHITECTURAL
AR	ANALOG RELAY
ASR	AQUIFER STORAGE AND RECOVERY
ATS	AUTOMATIC TRANSFER SWITCH
AUTO	AUTOMATIC
AUX	AUXILIARY
AVG	AVERAGE
AVRV	AIR VACUUM RELEASE VALVE
@	AT
BAL	BALANCE
BETW	BETWEEN
BF	BLIND FLANGE, BOTTOM FACE
BFV	BUTTERFLY VALVE
BFP	BACKFLOW PREVENTER
BLDG	BUILDING
BLK	BLOCK
BM	BEAM, BENCHMARK
BO	BOTTOM OF
B.O.B.	BOTTOM OF BEAM
BOP	BOTTOM OF PIPE
BOT	BOTTOM
BRG	BEARING
BRKR	BREAKER
BV	BALL VALVE, BLOCK VENT
BVC	BEGINNING OF VERTICAL CURVE
C	CONDUIT, CASEMENT
°C	DEGREE CELSIUS
C TO C	CENTER TO CENTER
CB	CATCH BASIN, CIRCUIT BREAKER
CCP	CENTRAL CONTROL PANEL
CCS	CENTRAL CONTROL SYSTEM
CFM	CUBIC FEET PER MINUTE
CFS	CUBIC FEET PER SECOND
CHEM	CHEMICAL
CHKD	CHECKERED
CI	CAST IRON
CIP	CAST IRON PIPE, CAST IN PLACE
CISP	CAST IRON SOIL PIPE
CJ	CONSTRUCTION JOINT
CKT	CIRCUIT
CL	CENTERLINE
CLDI	CEMENT LINED DUCTILE IRON
CLG	CEILING
CLR	CLEAR, CLEARANCE
CLSM	CONTROLLED LOW STRENGTH MATERIAL
CMP	CORRUGATED METAL PIPE
CMU	CONCRETE MASONRY UNIT
CO	CLEANOUT, CARBON MONOXIDE
COL	COLUMN, COLOR
CONC	CONCRETE
CONN	CONNECTION
CONSTR	CONSTRUCTION
CONT	CONTINUED, CONTINUOUS, CONTINUATION
CONTR	CONTRACTOR
COORD	COORDINATE
CP-X	CONTROL PANEL NO. X
CPLG	COUPLING
CPT	CONTROL POWER TRANFORMER, CARPET
CPVC	CHLORINATED PVC
CR	CONTROL RELAY
CRS	COLD ROLLED STEEL
CS	CARBON STEEL
CT	CURRENT TRANSFORMER
CTC	COMPUTER TERMINAL CABINET
CTR	CENTER
CTRD	CENTERED
CTS	CALCIUM THIOSULFATE SOLUTION
CTSK	COUNTERSUNK
CY, CU YD	CUBIC YARD

D	DEEP, DRAIN
d	PENNY NAIL SIZE
DBA	DEFORMED BAR ANCHOR
DBL	DOUBLE
DC	DIRECT CURRENT
DEG	DEGREE
DET	DETAIL
DI	DUCTILE IRON
DIA	DIAMETER
DIAG	DIAGONAL
DIP	DUCTILE IRON PIPE
DIR	DIRECTION
DN	DOWN
DOL	DIRECT-ON-LINE
DP, DPNL	DISTRIBUTION PANEL
DR	DOOR
DWG	DRAWING
DWL	DOWEL
△	DELTA
E	EAST, EMPTY
EA	EACH, EXHAUST AIR
ECC	ECCENTRIC
EE	EMERGENCY EYEWASH
EF	EACH FACE, EXHAUST FAN
EFF	EFFICIENCY, EFFICIENT
EL	ELEVATION
ELC	ELECTRICAL LOAD CENTER
ELEC	ELECTRIC, ELECTRICAL
ENGR	ENGINEER
EOP	EDGE OF PAVEMENT
EP	EXPLOSION PROOF, EDGE OF PAVING
EQL	EQUAL
EQL SP	EQUALLY SPACED
EQPT	EQUIPMENT
EW	EACH WAY
EXP	EXPANSION, EXPOSED
EXP AB	EXPANSION ANCHOR BOLT
EXP JT	EXPANSION JOINT
EXST, EXIST	EXISTING
EXT	EXTERIOR
°F	DEGREE FAHRENHEIT
FB	FLAT BAR
F, FU	FUSE
FC	FLEXIBLE CONDUIT
FCA	FLANGED COUPLING ADAPTER
FCCCHR	FOUNDATION FOR CROSS-CONNECTION CONTROL AND HYDRAULIC RESEARCH
FCL2	FREE CHLORINE RESIDUAL
FCO	FLOOR CLEANOUT
FD	FLOOR DRAIN
FDN	FOUNDATION
FDR	FEEDER
FEXT	FIRE EXTINGUISHER
FF	FINISHED FLOOR
FG	FINISH GRADE
FH	FLAT HEAD
FIG	FIGURE
FL	FLOW LINE, FLOOR
FLG	FLANGE
FLEX	FLEXIBLE
FLH	FLAT HEAD
FLUOR	FLUORESCENT
FNSH	FINISH
FP	FIELD PANEL
FPM	FEET PER MINUTE
FR	FORWARD REVERSE
FRP	FIBERGLASS REINFORCED PLASTIC
FT	FOOT OR FEET
FTG	FOOTING
FVNR	FULL VOLTAGE NON-REVERSING
FVR	FULL VOLTAGE REVERSING
FW	FINISHED WATER
FWD	FORWARD
G, GND	GROUND
GA	GAUGE
GAL	GALLON
GALV	GALVANIZED
GFI	GROUND FAULT INTERRUPTER
GFR	GROUND FAULT RELAY
GPD	GALLONS PER DAY
GPH	GALLONS PER HOUR
GPM	GALLONS PER MINUTE

GPS	GLOBAL POSITION SYSTEM
GRTG	GRATING
GSP	GALVANIZED STEEL PIPE
GVL	GRAVEL
GW	GROUNDWATER
H.A.S.	HEADED ANCHOR STUD
HDPE	HIGH DENSITY POLYETHYLENE PIPE
HDR	HEADER
HDW	HARDWARE
HGL	HYDRAULIC GRADE LINE
HGT	HEIGHT
HH	HANDHOLE
HID	HIGH INTENSITY DISCHARGE
HM	HOLLOW METAL
HOA	HAND-OFF-AUTO
HOR	HAND-OFF-REMOTE
HORIZ	HORIZONTAL
HP	HORSEPOWER
HPT	HIGH POINT
HV	HOSE VALVE
HVAC	HEATING, VENTILATING AND AIR CONDITIONING
HWL	HIGH WATER LEVEL
IC	INTERRUPTING CAPACITY
ID	INDUCED DRAFT, INSIDE DIAMETER
IE	INVERT ELEVATION
I.F.	INSIDE FACE
IN	INCH
INCAND	INCANDESCENT
INSTM	INSTRUMENT, INSTRUMENTATION
INSUL	INSULATION
INVT	INVERT
ITX	ISOLATION TRANSFORMER
JB	JUNCTION BOX
JCT	JUNCTION
JT	JOINT
KIP	THOUSAND POUNDS
KV	KILOVOLTS
KVA	KILOVOLT AMPERES
KVAR	KILOVOLT AMPERES REACTIVE
KW	KILOWATT
L	ANGLE, LENGTH
LB	POUND
LC	LIGHTING CONTACTOR
LEL	LOWER EXPLOSIVE LIMIT
LF	LINEAR FEET
LG	LONG
LH	LEFT HAND
LHR	LEFT HAND REVERSE
LLH	LONG LEG HORIZONTAL
LLV	LONG LEG VERTICAL
LONG	LONGITUDINAL
LOS	LOCK-OUT STOP PUSHBUTTON
LP	LIGHT POLE, LIGHTING PANEL, LOCAL PANEL
LPT	LOW POINT
LR	LONG RADIUS, LOCAL REMOTE, LATCHING RELAY
LT	LEFT
LTG, LTS	LIGHTS OR LIGHTING
LTX	LIGHTING TRANSFORMER
LWL	LOW WATER LEVEL
MA	MANUAL-AUTO
MATL	MATERIAL
MAX	MAXIMUM
MB	MACHINE BOLT
MC	MODULATE-CLOSE
MCC	MOTOR CONTROL CENTER
MCJ	MASONRY CONTROL JOINT
MECH	MECHANICAL
MFD	MANUFACTURED
MFR	MANUFACTURER
MH	MANHOLE, MOUNTING HEIGHT
MIN	MINIMUM
MISC	MISCELLANEOUS
MJ	MECHANICAL JOINT
MLO	MAIN LUGS ONLY
MO	MANUAL OPERABLE, MASONRY OPENING
MP	METAL PANEL
MPU	MULTIPURPOSE UNIT
MSC	MANUFACTURER SUPPLIED CABLE
MSR	GROUPED MOTOR CONTROL

MT	MOUNT
MTD	MOUNTED
MTG	MOUNTING
MTS	MANUAL TRANSFER SWITCH
MV	MERCURY VAPOR
N	NORTH, NEUTRAL
NA	NON-AUTOMATIC
NC	NORMALLY CLOSED
NEUT	NEUTRAL
NG	NATURAL GAS
NGVD	NATIONAL GEODETIC VERTICAL DATUM
NIC	NOT IN CONTRACT
N.O.	NORMALLY OPEN
NO., #	NUMBER
NOM	NOMINAL
NP	NON-PROTECTED
NPT	NATIONAL PIPE THREADS
NS	NON-SHRINK
NTS	NOT TO SCALE
O TO O	OUT TO OUT
OC	ON CENTER
OC	OPEN-CLOSE (O)
OCA	OPEN-CLOSE-AUTO
OCR	OPEN-CLOSE-REMOTE
OD	OUTSIDE DIAMETER, OVERFLOW DRAIN
O.F.	OUTSIDE FACE
OL	OVERLOAD RELAY
OO	ON-OFF
OOA	ON-OFF-AUTO
OOR	ON-OFF-REMOTE
OP	OPAQUE PANEL, OUTLET PROTECTION
OPER	OPERATOR
OPNG	OPENING
OPP	OPPOSITE
OSC	OPEN-STOP-CLOSE
PB	PUSHBUTTON SWITCH
PCV	PRESSURE CONTROL VALVE
PE	PLAIN END
PEN.	PENETRATION
PFC	POUNDS PER CUBIC FOOT
pH	HYDROGEN ION CONCENTRATION
PH	PHASE
PI	POINT OF INTERSECTION
PJF	PREMOULDED JOINT FILLER
PL	PLATE (STEEL), PROPERTY LINE
PLC	PROGRAMMABLE LOGIC CONTROLLER
PLYWD	PLYWOOD
PNL	PANEL
PP	POWER POLE
PR	PAIR
PRCST	PRECAST
PREFAB	PREFABRICATION
PRES	PRESSURE
PRI	PRIMARY
PROJ	PROJECTION
PROP	PROPERTY
PSF	POUNDS PER SQUARE FOOT
PSI	POUNDS PER SQUARE INCH
PSIG	POUNDS PER SQUARE INCH, GAUGE
PT	POINT OF TANGENCY, POTENTIAL TRANSFORMER
PVC	POLYVINYL CHLORIDE
PVI	POINT OF VERTICAL INTERSECTION
PVMT	PAVEMENT
PVT	POINT OF VERTICAL TANGENCY
R	RISER
R OR RAD	RADIUS
RC	REINFORCED CONCRETE
RCP	REINFORCED CONCRETE PIPE
RCPT	RECEPTACLE
RD	ROAD, ROOF DRAIN
RDCR	REDUCER
REF	REFER OR REFERENCE
REINF	REINFORCED, REINFORCING, REINFORCE
REQD	REQUIRED
RH	RIGHT HAND
RHR	RIGHT HAND REVERSE
RM	ROOM
RO	ROUGH OPENING
RPM	REVOLUTIONS PER MINUTE
RT	RIGHT
RTN	RETURN
R/W	RIGHT OF WAY

S	SLOPE, SOUTH, SWITCH
SA	SUPPLY AIR, SAMPLE
SCADA	SUPERVISORY CONTROL AND DATA ACQUISITION
SCFM	STANDARD CUBIC FEED PER MINUTE
SCHED	SCHEDULE
SCU	SPEED CONTROL UNIT
SD	STORM DRAIN
SDP	SUB-DISTRIBUTION PANEL
SEC	SECONDARY
SECT	SECTION
SH	SHEET, SODIUM HYPOCHLORITE
SIM	SIMILAR
SOLN	SOLUTION
SP	SPACE OR SPACES, SPANDREL PANEL, STORMPROOF
SPEC, SPECS	SPECIFICATIONS
SPG	SPACING
SQ	SQUARE
SQ FT	SQUARE FOOT, FEET
SQ IN	SQUARE INCH
SS	START-STOP
SST	STAINLESS STEEL
SSC	SUPERVISORY SET POINT CONTROL
ST	STRAIGHT
STA	STATUS, STATION
STD	STANDARD
STIF	STIFFENER
STIRR	STIRRUP
STL	STEEL
STRL	STRUCTUAL
STRUCT	STRUCTURE
SWBD	SWITCHBOARD
SWGR	SWITCHGEAR
SYMM	SYMMETRICAL
T	THERMOSTAT, TREAD
T&B	TOP AND BOTTOM
TAN	TANGENT
TB	TERMINAL BOARD
TC	TIME TO CLOSE
TDR	TIME DELAY RELAY
TEL	TELEPHONE
TEMP	TEMPORARY, TEMPERATURE
TF	TOP FACE
TH	TOP-HINGED
THD	THREAD
THK	THICKNESS
THRU	THROUGH
TJB	TERMINAL JUNCTION BOX
T.O.	TIME TO OPEN, TOP OF
TOA	TOP OF ASPHALT
TOC	TOP OF CONCRETE, TOP OF CURB
TOD	TIME ON DELAY, TOP OF DUCT
	TOTAL OXYGEN DEMAND
TOF	TOP OF FOOTING
TOG	TOP OF GROUT, TOP OF GRATE
T.O.P.	TOP OF PARAPET
TOS	TOP OF SLAB
TOW	TOP OF WALL
TR	TRANSOM, TRUSS
TRANS	TRANSFORMER, TRANSITION
TRANSV	TRANSVERSE
TRD	TREAD
TS	TUBE STEEL
TST	TOP OF STEEL
TURB	TURBIDITY
TX	TRANSFORMER
TYP	TYPICAL

UON	UNLESS OTHERWISE NOTED
UNO	UNLESS NOTED OTHERWISE
USB	UNIT SUBSTATION
UVR	UNDER VOLTAGE RELAY
V	VENT, VOLTMETER, VOLTS
VB	VAPOR BARRIER (RETARDER)
VC	VERTICAL CURVE
VEL	VELOCITY
VERT	VERTICAL
VPC	POINT OF VERTICAL CURVATURE
VPI	POINT OF VERTICAL INTERSECTION
VPT	POINT OF VERTICAL TANGENT
VTR	VENT THRU ROOF
W	WEST
W/	WITH
WC	WATER COLUMN
WH	WATTHOUR METER
WHD	WATTHOUR DEMAND METER
WP	WATERPROOF, WEATHERPROOF, WORKPOINT
WS	WATER SURFACE, WATERSTOP, WELDED STEEL
WWF	WELDED WIRE FABRIC

Registered Professional Engineer (Civil) CERTIFICATE NO. 16507 KEVIN M. BRAL Date Signed 10/16/2023 ARIZONA U.S.A.
Expires 06/30/2025

NO.	DATE	REVISION	BY	APVD
DSGN	R STURN	DR S METCALF	CHK R EDWARDS	APVD K BRAL

© JACOBS 2020. ALL RIGHTS RESERVED.

TRICO ENGINEERING, LLC
231 SWANSON AVENUE, LAKE HAVASU CITY, AZ 86403
WWW.TRICOENGINEERINGLLC.COM

ENGINEERS INC
PHOENIX, AZ 85085
PHONE: (623) 580-1000
WWW.JACENGINEERS.COM

CONSTRUCTION OF VADOSE ZONE WELL 8 & FACILITIES
107015
LAKE HAVASU CITY
2339 MCCULLOCH BLVD N.
LAKE HAVASU CITY, AZ 86403
(928) 855-2118

LAKE HAVASU CITY, ARIZONA • INCORPORATED 1978

REUSE OF DOCUMENTS: THIS DOCUMENT, AND THE IDEAS AND DESIGNS INCORPORATED HEREIN, AS AN INSTRUMENT OF PROFESSIONAL SERVICE, IS THE PROPERTY OF JACOBS AND IS NOT TO BE USED, IN WHOLE OR IN PART, FOR ANY OTHER PROJECT WITHOUT THE WRITTEN AUTHORIZATION OF JACOBS.

Jacobs

GENERAL
ABBREVIATIONS

VERIFY SCALE
BAR IS ONE INCH ON ORIGINAL DRAWING.
0 1"

DATE	OCTOBER 2023
PROJ	D3412600
DWG	G-3
SHEET	3 of 16

GENERAL CIVIL NOTES:

1. THE SOURCE OF TOPOGRAPHY SHOWN ON THE CIVIL PLANS MAY VARY FROM CURRENT ACTUAL CONDITIONS. THE CONTRACTOR SHALL VERIFY EXISTING CONDITIONS AND ADJUST WORK PLAN ACCORDINGLY PRIOR TO BEGINNING CONSTRUCTION.
2. EXISTING TOPOGRAPHY, STRUCTURES, AND SITE FEATURES ARE SHOWN SCREENED AND/OR LIGHT-LINED. NEW FINISH GRADE, STRUCTURES, AND SITE FEATURES ARE SHOWN HEAVY-LINED.
3. HORIZONTAL DATUM: COORDINATES ARE MODIFIED (GROUND) AZ STATE PLANE COORDINATES - CENTRAL ZONE (NAD 83).
4. VERTICAL DATUM: ELEVATIONS ARE NAVD 88.
5. MAINTAIN, RELOCATE, OR REPLACE EXISTING SURVEY MONUMENTS, CONTROL POINTS, AND STAKES WHICH ARE DISTURBED OR DESTROYED. PERFORM THE WORK TO PRODUCE THE SAME LEVEL OF ACCURACY AS THE ORIGINAL MONUMENT(S) IN A TIMELY MANNER, AND AT THE CONTRACTOR'S EXPENSE.
6. COORDINATES AND DIMENSIONS SHOWN FOR ROADWAY IMPROVEMENTS ARE TO FACE OF CURB OR EDGE OF PAVEMENT, UNLESS SPECIFICALLY SHOWN OTHERWISE.
7. STAGING AREA SHALL BE FOR CONTRACTOR'S EMPLOYEE PARKING, CONTRACTOR'S TRAILERS AND ON-SITE STORAGE OF MATERIALS.
8. PROVIDE TEMPORARY FENCING AS NECESSARY TO MAINTAIN SECURITY AT ALL TIMES.
9. ELEVATIONS SHOWN ARE TO FINISH GRADE UNLESS OTHERWISE SHOWN.
10. SLOPE UNIFORMLY BETWEEN CONTOURS AND SPOT ELEVATIONS SHOWN.
11. ALL DISTURBED AREAS SHALL BE RESTORED TO MATCH EXISTING.
12. CONTRACTOR SHALL BE RESPONSIBLE FOR IMPLEMENTING AND MAINTAINING EROSION CONTROL DEVICES DURING CONSTRUCTION.
13. CONTRACTOR SHALL TAKE ALL MEASURES NECESSARY TO POSITIVELY PRECLUDE EROSION MATERIALS FROM LEAVING THE SITE. CONTRACTOR TO SUBMIT EROSION CONTROL PLAN.

GENERAL YARD PIPING AND UTILITIES NOTES:

1. EXISTING UNDERGROUND UTILITIES OBTAINED FROM AS-BUILTS AND FROM FIELD SURVEY. CONTRACTOR SHALL FIELD VERIFY DEPTH AND LOCATION PRIOR TO EXCAVATION. PROTECT ALL EXISTING UTILITIES DURING CONSTRUCTION.
2. FOR PIPING FLOW STREAM IDENTIFICATION, SEE DRAWING G-4.
3. EXISTING PIPING AND EQUIPMENT ARE SHOWN SCREENED AND/OR LIGHT-LINED. NEW PIPING AND EQUIPMENT ARE SHOWN HEAVY-LINED.
4. UNLESS OTHERWISE SHOWN ALL PIPING SHALL HAVE A MINIMUM OF 3' COVER.
5. ALL PIPES SHALL HAVE A CONSTANT SLOPE BETWEEN INVERT ELEVATIONS UNLESS A FITTING IS SHOWN.
6. ALL NEW POTABLE WATER PIPES MUST BE PROPERLY FLUSHED, PRESSURE TESTED, CHLORINATED AND BACTERIOLOGICALLY TESTED, AS SPECIFIED.
7. FOR TRENCHING AND BACKFILL, SEE LAKE HAVASU CITY UTILITY TRENCH PATCH DETAIL NO. 200 ON DWG P-5.
8. FOR SURFACE RESTORATION OF ASPHALT CONCRETE, SEE LAKE HAVASU CITY UTILITY TRENCH PATCH DETAIL NO. 200 ON DWG P-5.
9. MINIMUM ALLOWABLE CLEARANCE BETWEEN PIPES AT CROSSINGS SHALL BE 18" UNLESS SHOWN OTHERWISE. WHEN CLEARANCE BETWEEN PIPE AT CROSSING IS LESS THAN 18" CONTROLLED LOW-STRENGTH MATERIAL IS REQUIRED.
10. CONTRACTOR IS TO COORDINATE WITH CITY STAFF TO ALLOW FOR PIPE TO BE GPS'D PRIOR TO BURIAL.

GENERAL NOTE:

1. THIS IS A STANDARD LEGEND SHEET. THEREFORE, NOT ALL OF THE INFORMATION SHOWN MAY BE USED ON THIS PROJECT.

CIVIL LEGEND

EXISTING	THIS CONTRACT	
× 157.7	⊗ 158.5	SPOT ELEVATION
155	155	CONTOUR LINE
	3:1	EMBANKMENT AND SLOPE
		DRAINAGEWAY OR DITCH
	CB OR CB	CATCH BASIN OR INLET
		TRENCH DRAIN
	OR	SIGN
	D OR S	MANHOLE
E	E	ELECTRICAL MANHOLE
H	H	ELECTRIC HANDHOLE
		POST OR GUARD POST
		GUY ANCHOR
		FIRE HYDRANT
		UTILITY POLE
		LIGHT POLE
	BM	BENCH MARK
		SURVEY CONTROL POINT OR POINT OF INTERSECTION
		BRUSH/TREE LINE
		TREE
		PROPERTY LINE
		CENTER LINE, BUILDING, ROAD, ETC.
		STAGING OR WORK AREA LIMITS
	N 1000.00 E 1000.00	STRUCTURE, BUILDING OR FACILITY LOCATION POINT - COORDINATES
	B-1	BORING LOCATION AND NUMBER
	TP-2	TEST PIT LOCATION AND NUMBER
	P-3	PIEZOMETER LOCATION AND NUMBER
OR	OR	DEMOLITION
OR	OR	STRUCTURE, BUILDING OR FACILITY
		ASPHALT CONCRETE PAVEMENT
		GRAVEL SURFACING
		CONCRETE PAVEMENT
		CURB
		CURB AND GUTTER
		SINGLE SWING GATE
		DOUBLE SWING GATE
		SLIDING GATE
		GUARD RAIL
		CHAIN LINK FENCE
		ARCHITECTURAL FENCE
		WIRE FENCE
		CULVERT

YARD PIPING LEGEND

EXISTING	THIS CONTRACT	
	NOMINAL PIPE DIAMETER	
	PIPE USE IDENTIFICATION	
8" PE	8" PE	PIPING < 12" DIAMETER
		PIPING ≧ 12" DIAMETER
		EXISTING PIPE TO BE ABANDONED
		EXISTING CONCRETE PAVEMENT TO BE REMOVED
		EXISTING ASPHALT PAVEMENT TO BE REMOVED AND REPLACED
		INDICATOR POST VALVE
		GATE VALVE AND VALVE BOX
		BUTTERFLY VALVE AND VALVE BOX
		PLUG VALVE AND VALVE BOX
		FLEXIBLE COUPLING
		90° ELBOW UP
		90° ELBOW DOWN
		BEND < 90° UP
		BEND < 90° DOWN
		CONCENTRIC REDUCER
		CAP OR PLUG
		CLEANOUT
		FIRE HYDRANT

LINE SIZE AND MATERIAL IDENTIFICATION

(FOR REFERENCE ONLY. SEE SITE AND MECHANICAL DRAWINGS)

18CLDI

PIPE DIAMETER IN INCHES

PIPE MATERIAL ABBREVIATION

CISP	CAST IRON SOIL PIPE
CLDI	CEMENT LINED DUCTILE IRON
CLSTL	CEMENT LINED STEEL
CU	COPPER
FRP	FIBERGLASS REINFORCED PLASTIC
PVC	POLYVINYL CHLORIDE
SST	STAINLESS STEEL
STL	STEEL

FLOW STREAM IDENTIFICATION

D	DRAIN
FW	FINISHED WATER
GW	GROUND WATER
SA	SAMPLE

Registered Professional Engineer (Civil) CERTIFICATE NO. 50507 KEVIN M. BRAL Date Signed 10/30/2023 ARIZONA U.S.A.
Expires 06/30/2025

NO.	DATE	REVISION	BY	APVD
DSGN	R STURN	DR S METCALF	CHK R EDWARDS	APVD K BRAL

© JACOBS 2020. ALL RIGHTS RESERVED.

TRICO ENGINEERING, LLC
231 SWANSON AVENUE, STE. 104
LAKE HAVASU CITY, AZ 86403
WWW.TRICOENGINEERINGLLC.COM

Jacobs ENGINEERS INC
PHOENIX, AZ 85085
(602) 494-5500
WWW.JACENGINEERS.COM

CONSTRUCTION OF VADOSE ZONE WELL 8 & FACILITIES 107015
LAKE HAVASU CITY
2330 MCCULLOCH BLVD N.
LAKE HAVASU CITY, AZ 86403
(928) 855-4216

LAKE HAVASU CITY, ARIZONA • INCORPORATED 1978

REUSE OF DOCUMENTS: THIS DOCUMENT, AND THE IDEAS AND DESIGNS INCORPORATED HEREIN, AS AN INSTRUMENT OF PROFESSIONAL SERVICE, IS THE PROPERTY OF JACOBS AND IS NOT TO BE USED, IN WHOLE OR IN PART, FOR ANY OTHER PROJECT WITHOUT THE WRITTEN AUTHORIZATION OF JACOBS.

GENERAL
CIVIL NOTES AND LEGEND

VERIFY SCALE
BAR IS ONE INCH ON ORIGINAL DRAWING.
0 1"

DATE	OCTOBER 2023
PROJ	D3412600
DWG	G-4
SHEET	4 of 16

PIPE AND FITTING SYMBOLS

DOUBLE LINE	SINGLE LINE	
		EXISTING PIPE
		NEW PIPE
		EXISTING PIPE TO BE ABANDONED
		EXISTING PIPE TO BE REMOVED
		WELDED JOINT
		GROOVED END JOINT
		FLANGED JOINT
		MECHANICAL JOINT & PROPRIETARY RESTRAINED JOINT
		BELL & SPIGOT JOINT (LEADED)
		HUB & SPIGOT JOINT (RUBBER GASKET)
		BALL JOINT
		ADAPTER SIDE GROOVED END ADAPTER FLANGE
		FLANGED COUPLING ADAPTER
		FLEXIBLE COUPLING
		METAL BELLOWS EXP JOINT
		ELASTOMER BELLOWS EXP JOINT
		ELBOW UP
		ELBOW DOWN
		TEE UP
		TEE DOWN
		LATERAL UP
		LATERAL DOWN
		CONCENTRIC REDUCER
		ECCENTRIC REDUCER

DOUBLE LINE	SINGLE LINE	
		REDUCING BUSHING
		UNION
		CAP
		ANCHOR
		ELBOW, 90 DEGREE
		CROSS
		TEE
		ELBOW, 45 DEGREE
		LATERAL

NOTES:

1. ONLY FLANGED END CONNECTIONS ARE SHOWN HERE FOR DOUBLE LINE FITTINGS. FITTINGS WITH OTHER END PATTERNS ARE SHOWN SIMILARLY ON THE CONSTRUCTION DRAWINGS. ALSO SEE PIPING SPECIFICATIONS.
2. SYMBOLS SHOWN HERE FOR SINGLE LINE FITTINGS ARE GENERIC ONLY. REFER TO PIPING SPECIFICATIONS FOR SPECIFIC END CONNECTIONS FOR SINGLE LINE PIPE AND FITTINGS.
3. EXISTING PIPE AND EQUIPMENT IS SHOWN LIGHT-LINED AND/OR SCREENED AND IS NOTED AS EXISTING. NEW PIPING AND EQUIPMENT IS SHOWN HEAVY-LINED.

VALVE SYMBOLS

SINGLE LINE	DOUBLE LINE
GATE	
KNIFE GATE	OR
BUTTERFLY	OR
GLOBE	OR
BALL	OR
SEATING PORT	
ECCENTRIC PLUG	OR
PLUG OR COCK	OR
NEEDLE	OR
DIAPHRAGM	OR
PINCH	OR
SWING CHECK	OR
BALL CHECK	OR

HOSE VALVE (HV- X) OR (V-X)
X = NO. IN SPECS

SAMPLE

MUD

PRESSURE RELIEF

AIR AND/OR VACUUM RELEASE

REGULATED SIDE

PRESSURE CONTROL (INTERNAL PILOT)

REGULATED SIDE

PRESSURE CONTROL (EXTERNAL PILOT)

MULTI-PORT VALVE,
ARROWS INDICATE FLOW PATTERN.
SEATING PORTS ARE IMPLIED BY
INDICATED FLOW PATTERN.

TELESCOPING SCUM VALVE

ACTUATOR SYMBOLS

PNEUMATIC DIAPHRAGM

PNEUMATIC CYLINDER

ELECTRIC MOTOR

HYDRAULIC

MANUAL

SOLENOID

ELECTRO HYDRAULIC

PIPING DESIGNATION

EXAMPLE:

16" TWE

16" TWE

SERVICE, SEE SPECIFICATIONS FOR PIPE SCHEDULE

PIPE DIAMETER

MECHANICAL LEGEND AND NOTES

GENERIC PIPING NOTES

1. LAY PIPE TO UNIFORM GRADE BETWEEN INDICATED ELEVATION POINTS.
2. SIZE OF FITTINGS SHOWN ON DRAWINGS SHALL CORRESPOND TO ADJACENT STRAIGHT RUN OF PIPE, UNLESS OTHERWISE INDICATED. TYPE OF JOINT AND FITTING MATERIAL SHALL BE THE SAME AS SHOWN FOR ADJACENT STRAIGHT RUN OF PIPE.
3. LOCATION AND NUMBER OF PIPE HANGERS AND PIPE SUPPORTS SHOWN IS ONLY APPROXIMATE. CONTRACTOR SHALL DESIGN SUPPORTS AS SPECIFIED.
4. ALL JOINTS SHALL BE WATERTIGHT. WALL PIPES SHALL BE USED WHEREVER PIPING PASSES FROM A STRUCTURE TO BACKFILL.
5. ALL FLEXIBLE CONNECTORS AND COUPLING ADAPTERS SHALL BE PROVIDED WITH THRUST PROTECTION AS SPECIFIED, UNLESS OTHERWISE NOTED. THRUST PROTECTION SHALL BE ADEQUATE FOR TEST PRESSURES SPECIFIED.
6. SYMBOLS, LEGENDS, AND PIPE USE IDENTIFICATIONS SHOWN SHALL BE FOLLOWED THROUGHOUT THE DRAWINGS, WHEREVER APPLICABLE. NOT ALL OF THE VARIOUS PIPING COMPONENTS ARE NECESSARILY USED IN THE PROJECT.
7. ALL BURIED PIPING SPECIFIED TO BE PRESSURE TESTED, EXCEPT EXPOSED FLANGED, WELDED, OR SCREWED PIPING, SHALL BE PROVIDED WITH THRUST PROTECTION AS SPECIFIED, UNLESS OTHERWISE NOTED.
8. NUMBER AND LOCATION OF UNIONS SHOWN ON DRAWINGS IS ONLY APPROXIMATE. PROVIDE ALL UNIONS NECESSARY TO FACILITATE CONVENIENT REMOVAL OF VALVES AND MECHANICAL EQUIPMENT.
9. WHERE A GROOVED END COUPLING IS SHOWN, IT SHALL BE THE RIGID JOINT TYPE, UNLESS OTHERWISE SPECIFIED. WHERE A FLANGED COUPLING ADAPTER IS SHOWN, A STANDARD FLANGE SHALL BE JOINED TO THE COUPLING ADAPTER.

Registered Professional Engineer (Civil)
CERTIFICATE NO. 46507
KEVIN M. BRAL
Date Signed 10/16/2023
ARIZONA U.S.A.
Expires 06/30/2025

NO.	DATE	REVISION	BY	APVD
DSGN	Q WANG	DR J WILCOX	CHK R EDWARDS	APVD K BRAL

© JACOBS 2020. ALL RIGHTS RESERVED.

TRICO ENGINEERING, LLC
231 SWANSON AVENUE, STE. A
LAKE HAVASU CITY, AZ 86403
(928) 855-1245
WWW.TRICOENGINEERINGLLC.COM

ENGINEERS INC
PHOENIX, AZ 85085
(602) 494-5650
WWW.JK-ENGINEERS.COM

CONSTRUCTION OF
VADOSE ZONE
WELL 8 & FACILITIES
107015

2330 MCCULLOCH BLVD N.
LAKE HAVASU CITY, AZ 86403
(928) 855-2116

LAKE HAVASU CITY, ARIZONA • INCORPORATED 1978

Jacobs

GENERAL
MECHANICAL NOTES
AND LEGEND

REUSE OF DOCUMENTS: THIS DOCUMENT, AND THE IDEAS AND DESIGNS INCORPORATED HEREIN, AS AN INSTRUMENT OF PROFESSIONAL SERVICE, IS THE PROPERTY OF JACOBS AND IS NOT TO BE USED, IN WHOLE OR IN PART, FOR ANY OTHER PROJECT WITHOUT THE WRITTEN AUTHORIZATION OF JACOBS.

VERIFY SCALE
BAR IS ONE INCH ON ORIGINAL DRAWING.
0 1"

DATE	OCTOBER 2023
PROJ	D3412600
DWG	G-5
SHEET	5 of 16

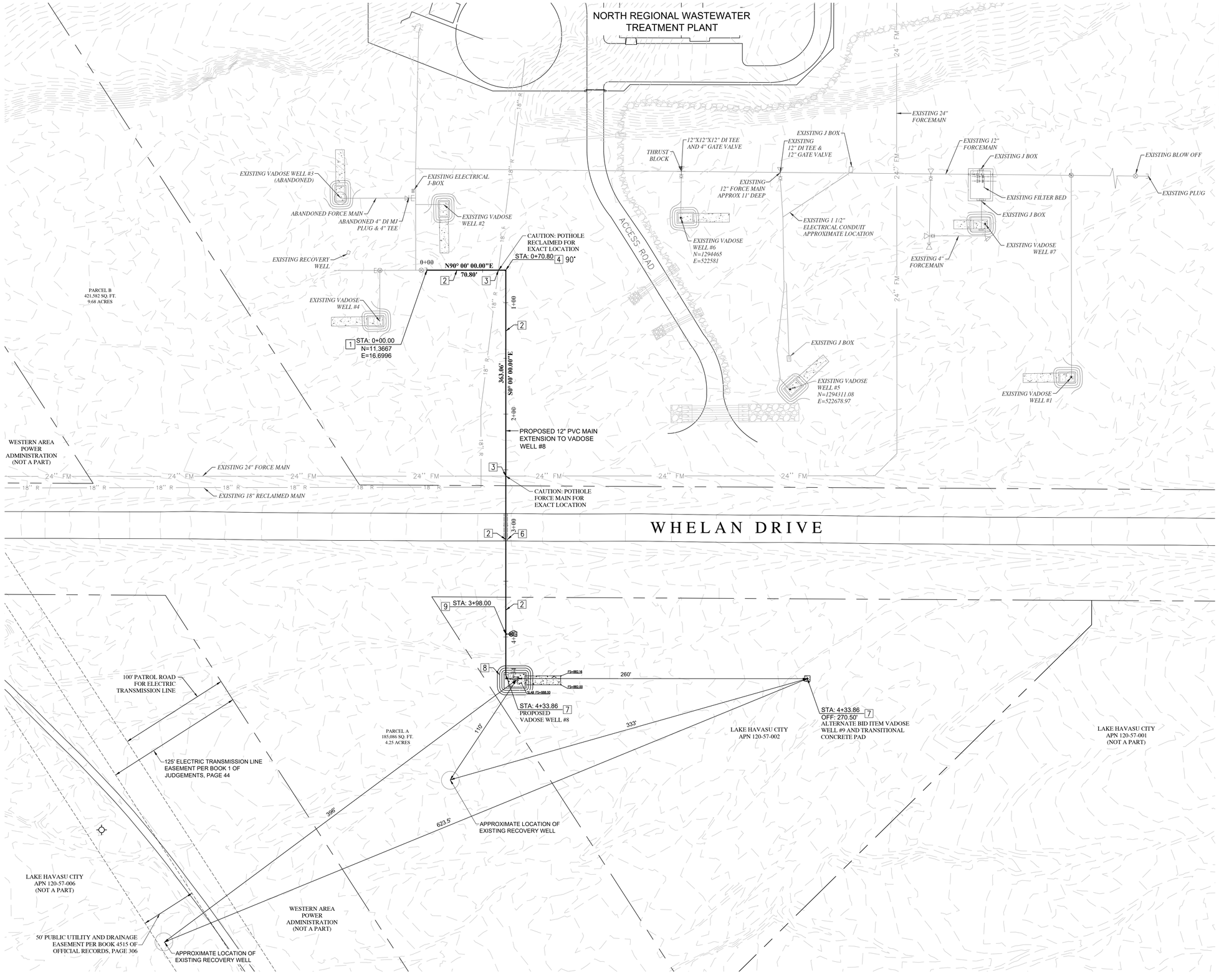

KEY NOTES:

1. REMOVE EXISTING 12" CAP AND JOIN TO EXISTING.
2. INSTALL 12" PVC C900 DR18 MINIMUM OF 3 FEET OF COVER PER DETAIL 5 AND 200 ON SHEET C-3. PIPE MUST BE PURPLE IN COLOR.
3. CONTRACTOR TO DIG WITH CAUTION AT APPROXIMATE CROSSING LOCATION.
4. INSTALL DI 12" FITTING; DEGREE PER PLAN PER DETAIL 4 ON SHEET C-3.
5. REFER TO DETAIL 1 ON SHEET C-3 FOR CONNECTION.
6. SAW CUT PAVEMENT AND REPLACE AC PAVEMENT IN KIND.
7. CONSTRUCT VADOSE ZONE WELL PLATFORM PER DETAIL 1 ON SHEET C-3.
8. INSTALL FENCE PER DETAIL 3 ON SHEET C-3.
9. INSTALL 12" DI TEE PER DETAIL 2 ON SHEET C-3.
10. INSTALL 4" PVC C900 DR18 PIPE MINIMUM OF 3 FEET OF COVER. PIPE SHALL BE OF COLOR PURPLE.

Registered Professional Engineer (Civil) — STEVEN D. PERROTTO — 51810 — Date Signed 12-31-23 — ARIZONA U.S.A. — EXPIRES 12-31-2025

NO.	DATE	REVISION	BY	APVD

DSGN	S. PERROTTO	DR	J. CULWELL	CHK	R. EDWARDS	APVD	K. BRAL

© JACOBS 2023. ALL RIGHTS RESERVED.

TRICO ENGINEERING, LLC
231 SWANSON AVENUE, STE. 204
LAKE HAVASU CITY, AZ 86403
WWW.TRICOENGINEERING.COM

ENGINEERS INC
2141 E. BROADWAY BLVD.
TUCSON, AZ 85719
(520) 325-4757
TUCSON@JACOBS.COM
PHOENIX, AZ 85008
FARGO, ND 58102
(701) 282-7400 FARGO@JACOBS.COM

VADOSE WELL DESIGN
107015
LAKE HAVASU CITY
2330 MCCULLOCH BLVD N.
LAKE HAVASU CITY, AZ 86403
(928)855-5210

LAKE HAVASU CITY, ARIZONA • INCORPORATED 1978

Jacobs

CIVIL

VADOSE WELL SITE PLAN

1" = 40'

VERIFY SCALE

BAR IS ONE INCH ON ORIGINAL DRAWING.
0 1"

DATE	OCTOBER 2023
PROJ	D3607700
DWG	C-1
SHEET	6 of 16

REUSE OF DOCUMENTS: THIS DOCUMENT, AND THE IDEAS AND DESIGNS INCORPORATED HEREIN, AS AN INSTRUMENT OF PROFESSIONAL SERVICE, IS THE PROPERTY OF JACOBS AND IS NOT TO BE USED, IN WHOLE OR IN PART, FOR ANY OTHER PROJECT WITHOUT THE WRITTEN AUTHORIZATION OF JACOBS.

F:\Trico Engineering LLC\Projects\2022\22-063_Jacobs-Vadose Zone Well Design\CAD\Improvement Plans\22-063_Vadose Well 8 Plans.dwg LS:(10/30/2023 - awagenschitz) - LP: 10/30/2023 11:39 AM

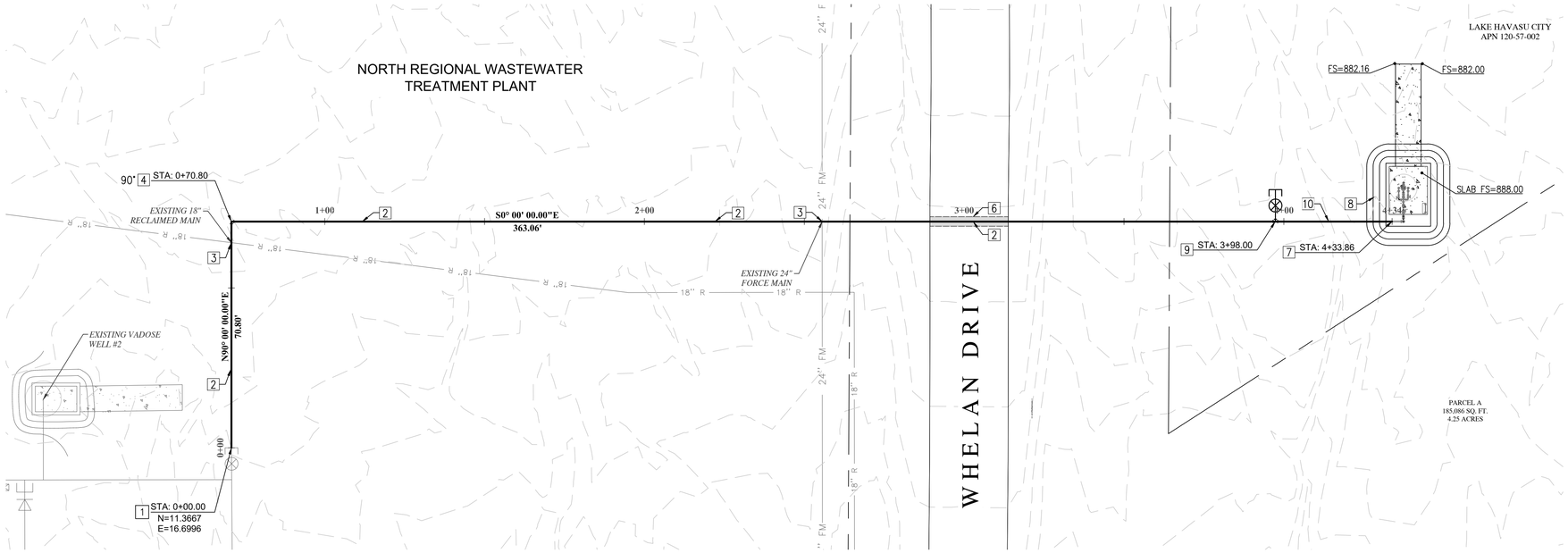

PLAN VIEW

KEY NOTES:

1. REMOVE EXISTING 12" CAP AND JOIN TO EXISTING.
2. INSTALL 12" PVC C900 DR18 MINIMUM OF 3 FEET OF COVER PER DETAIL 5 AND 200 ON SHEET C-3. PIPE MUST BE PURPLE IN COLOR.
3. CONTRACTOR TO DIG WITH CAUTION AT APPROXIMATE CROSSING LOCATION.
4. INSTALL DI 12" FITTING; DEGREE PER PLAN PER DETAIL 4 ON SHEET C-3.
5. REFER TO DETAIL 1 ON SHEET C-3 FOR CONNECTION.
6. SAW CUT PAVEMENT AND REPLACE AC PAVEMENT IN KIND.
7. CONSTRUCT VADOSE ZONE WELL PLATFORM PER DETAIL 1 ON SHEET C-3.
8. INSTALL FENCE PER DETAIL 3 ON SHEET C-3.
9. INSTALL 12" DI TEE PER DETAIL 2 ON SHEET C-3.
10. INSTALL 4" PVC C900 DR18 PIPE MINIMUM OF 3 FEET OF COVER. PIPE SHALL BE OF COLOR PURPLE.

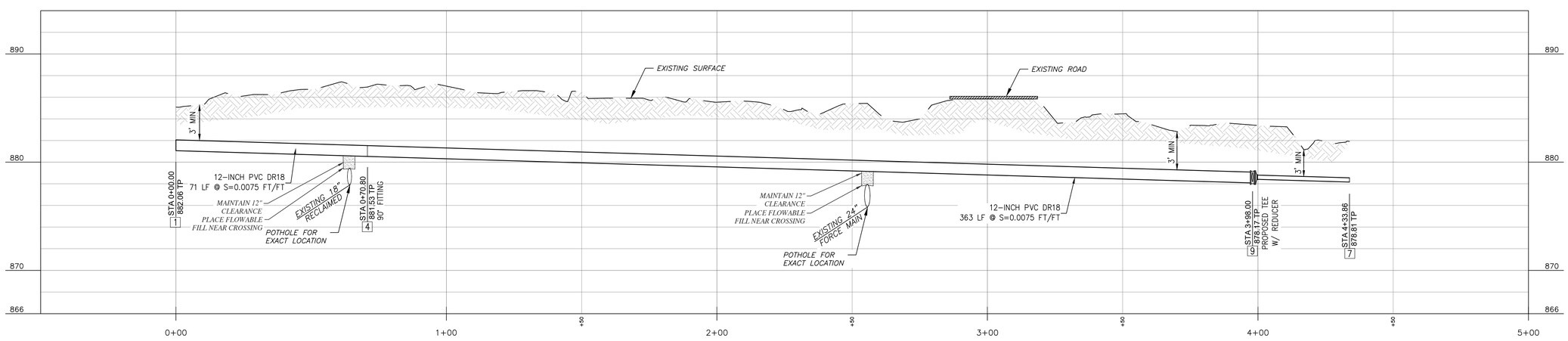

PROFILE VIEW

SCALE H:1"=20'; V:1"=5'

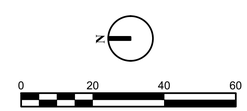

SCALE: 1"=20'-0"

NO.	DATE	REVISION	BY	APVD

DSGN S. PERROTTO | DR J. CULWELL | CHK R. EDWARDS | APVD K. BRAL

TRICO ENGINEERING, LLC
211 SWANSON AVENUE, STE. 204
LAKE HAVASU CITY, AZ 86403
WWW.TRICOENGINEERING.COM

JACOBS ENGINEERS INC
2415 E. CAMELBACK RD., STE. 700
PHOENIX, AZ 85016
FARGO, ND 58102
WWW.JACOBSENGINEERS.COM

VADOSE WELL DESIGN
107015
LAKE HAVASU CITY
2330 MCCULLOCH BLVD N.
LAKE HAVASU CITY, AZ 86403
(928)855-2116

Jacobs

CIVIL
PLAN & PROFILE

1" = 20'
VERIFY SCALE
BAR IS ONE INCH ON ORIGINAL DRAWING.
0 1"

DATE	OCTOBER 2023
PROJ	D3607700
DWG	C-2
SHEET	7 of 16

REUSE OF DOCUMENTS: THIS DOCUMENT, AND THE IDEAS AND DESIGNS INCORPORATED HEREIN, AS AN INSTRUMENT OF PROFESSIONAL SERVICE, IS THE PROPERTY OF JACOBS AND IS NOT TO BE USED, IN WHOLE OR IN PART, FOR ANY OTHER PROJECT WITHOUT THE WRITTEN AUTHORIZATION OF JACOBS.
© JACOBS 2023. ALL RIGHTS RESERVED.

EXPIRES 12-31-2025

F:\Trico Engineering LLC\Projects\2022\22-063_Jacobs-Vadose Zone Well Design\CAD\Improvement Plans\22-063_Vadose Well & Plans.dwg LS:(10/30/2023 - awagenschitz) - LP: 10/30/2023 11:40 AM

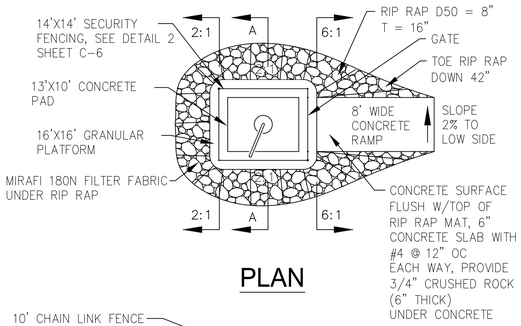

PLAN

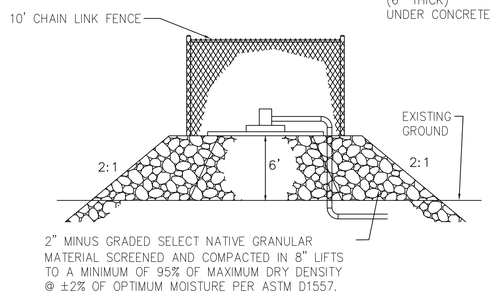

SECTION "A"

1 VADOSE ZONE WELL PLATFORM

N.T.S.

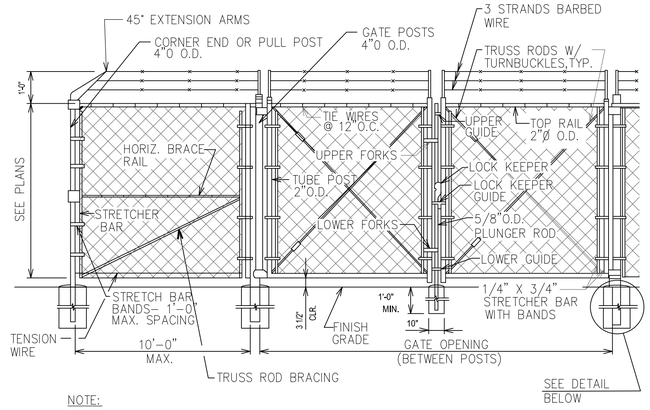

NOTE:

HORIZ. BRACE RAILS AND TRUSS ROD BRACING SHALL BE INSTALLED AT ALL CORNER,END,AND PULL POSTS. FABRIC SHALL BE FASTENED TO LINE POSTS AT NO MORE THAN 14" INTERVALS. TENSION WIRES SHALL BE TIED TO FABRIC WITH 9 GA. WIRE OR 11 GA. HOG RINGS AT INTERVALS OF 24" MAX.

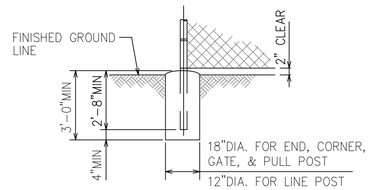

NOTE:

CONCRETE FOOTINGS WILL BE REQUIRED FOR ALL LINE, CORNER, GATE, END AND PULL POSTS.

3 FENCE

N.T.S.

Issued: 02/01/2019

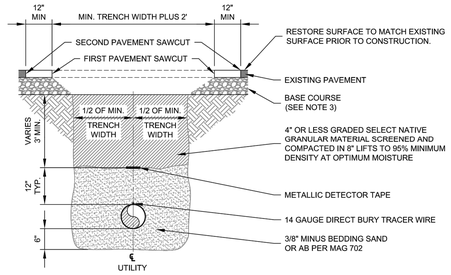

MINIMUM TRENCH WIDTH TABLE

PIPE DIAMETER	MINIMUM WIDTH	MINIMUM BETWEEN FIRST SAWCUTS	MINIMUM BETWEEN SECOND SAWCUTS	CONCRETE PAVEMENT
<8 IN.	24"	4'	6'	SECOND SAWCUT SHALL BE AT EXISTING JOINTS, SEE NOTE #5
8IN.-12IN.	30"	4'-6"	6'-6"	
14IN.-18IN.	36"	5'	7'	
20IN.-24IN.	42"	5'-6"	7'-6"	
24IN.-36IN.	1.25 (PIPE OD) PLUS 12IN.	MIN. WIDTH PLUS 2'	MIN. WIDTH PLUS 4'	
>36IN.	PER PLANS	MIN. WIDTH PLUS 2'	MIN. WIDTH PLUS 4'	

NOTES:

1. ALL SAWCUTS TO BE FULL DEPTH OF PAVEMENT.
2. PATCH MATERIAL SHALL MATCH THE EXISTING PAVEMENT MATERIAL (eg CONCRETE PAVEMENT SHALL BE PATCHED WITH CONCRETE AND EXISTING ASPHALT PAVEMENT WITH ASPHALT).
3. FOR ASPHALT PATCHES, BASE COURSE & ASPHALT CONCRETE THICKNESS IS TO MATCH EXISTING BUT IN NO CASE LESS THAN 0" BASE 2" ASPHALT CONCRETE.
4. ALL EXISTING VERTICAL ASPHALT JOINTS SHALL BE TACK COATED.
5. FINAL CONCRETE PAVEMENT REMOVALS SHALL BE TO THE NEAREST EXISTING JOINT (eg FULL PANEL REMOVAL AND REPLACEMENT).
6. TRENCHES ARE SHOWN TO DIAGRAM PATCHING REQUIREMENTS. TRENCHES SHALL BE CONSTRUCTED TO MEET OSHA REQUIREMENTS.
7. PAVEMENT REMOVAL BETWEEN FIRST AND SECOND SAW CUT SHALL BE REMOVED AT TIME OF HOT MIX PATCHING . DENSITY TESTING SHALL BE AT THE EXPENSE OF THE CONTRACTOR AND A COPY OF RESULTS SHALL BE PROVIDED TO THE CITY.
9. MONITOR & MAINTAIN SURFACE CONDITION AND PERFORM ASPHALT REPAIRS UNDER 1-YEAR WARRANTY PROVIDED THROUGH PERMIT.
10. ALL PATCH JOINTS SHOULD BE HENRY ASPHALT RESURFACER SEALED OR APPROVED EQUAL.

LAKE HAVASU CITY	Standard Details	Utility Trench Patch	Scale: N.T.S.
	Roadway Improvements		Detail No. 200

\\Lhcdataengineering\Programs\Standards\Developing Public Works Standards\LHC Standard Details\LHC Series 200 Roadway\DWG\DETAIL 200.dwg

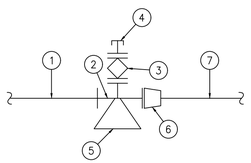

MATERIALS

1. 12" (MIN) PVC C900 DR18
2. 12 DI TEE, FLG X FLG
3. 12" GATE VALVE, FLG X FLG
4. 12" DI BLIND FLANGE
5. THRUST BLOCK PER DETAIL 4 ON SHEET HEREON
6. 12" X 4" DI REDUCER
7. 4" PVC C900 DR18

NOTE:

1. INSTALL VALVE WELL & COVER PER MAG STD 301 & 391–1.

2 12" TEE CONNECTION

N.T.S.

HORIZONTAL BENDS	B	C	E	F	AREA SF
6" 11¼° & 22½°	6"	24"	14"	18"	1.7
6" 45°	6"	24"	26"	18"	3.2
6" 90°	6"	24"	48"	18"	6.0
6" TEE OR PLUG	8"	24"	34"	18"	4.2
8" 11¼° & 22½°	8"	24"	18"	24"	2.9
8" 45°	8"	24"	35"	24"	5.8
8" 90°	8"	24"	64"	24"	10.7
8" TEE OR PLUG	8"	24"	45"	24"	7.5
12" 11¼° & 22½°	12"	30"	27"	36"	6.6
12" 45°	12"	30"	52"	36"	13.0
12" 90°	12"	30"	96"	36"	24.0
12" TEE OR PLUG	12"	30"	68"	36"	17.0
16" 11¼°	12"	36"	24"	36"	5.9
16" 22½°	12"	36"	36"	48"	11.8
16" 45°	12"	36"	69"	48"	23.1
16" 90°	12"	36"	128"	48"	42.7
16" TEE OR PLUG	12"	36"	91"	48"	30.2
18" 11¼°	14"	42"	23"	48"	7.5
18" 22½°	14"	42"	45"	48"	14.9
18" 45°	14"	42"	78"	54"	29.2
18" 90°	14"	42"	144"	54"	54.0
18" TEE OR PLUG	14"	42"	102"	54"	38.2
20" 11¼°	16"	48"	28"	48"	9.2
20" 22½°	16"	48"	55"	48"	18.4
20" 45°	16"	48"	87"	60"	36.1
20" 90°	16"	48"	160"	60"	66.6
20" TEE OR PLUG	16"	48"	113"	60"	47.1
24" 11¼°	18"	54"	32	60"	13.3
24" 22½°	18"	54"	64"	60"	26.5
24" 45°	18"	54"	104"	72"	51.9
24" 90°	18"	54"	192"	72"	96.0
24" TEE OR PLUG	18"	54"	136"	72"	67.9

VERTICAL BEND

BLOCK VOLUME FOR VERTICAL BENDS, CY			
	11-1/4°	22-1/2°	45°
6"	0.5	0.9	1.7
8"	0.8	1.6	3.0
12"	1.8	3.6	6.6
16"	3.2	6.3	11.6
18"	4.1	8.0	14.8
20"	5.0	9.8	18.0
24"	7.2	14.1	26.0

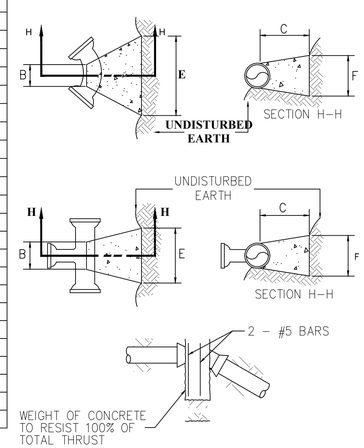

4 TYPICAL THRUST BLOCK FOR FITTINGS AND PLUGS

N.T.S.

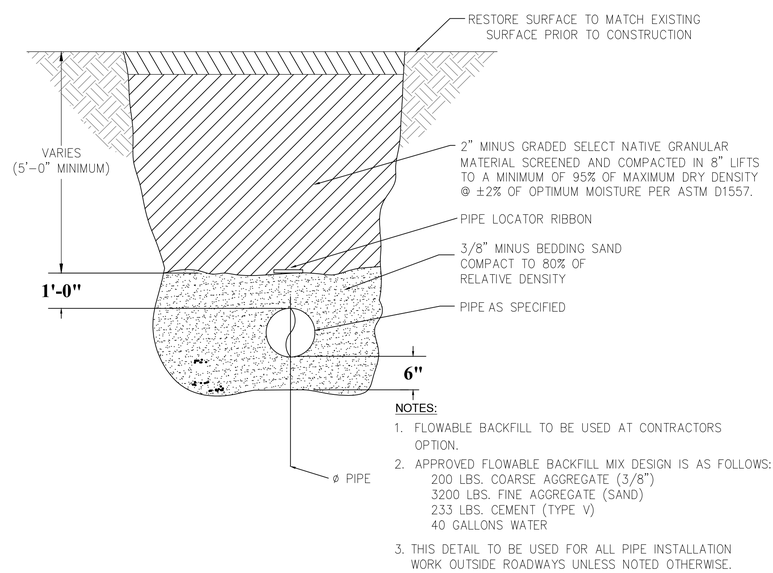

NOTES:

1. FLOWABLE BACKFILL TO BE USED AT CONTRACTORS OPTION.
2. APPROVED FLOWABLE BACKFILL MIX DESIGN IS AS FOLLOWS:
   200 LBS. COARSE AGGREGATE (3/8")
   3200 LBS. FINE AGGREGATE (SAND)
   233 LBS. CEMENT (TYPE V)
   40 GALLONS WATER
3. THIS DETAIL TO BE USED FOR ALL PIPE INSTALLATION WORK OUTSIDE ROADWAYS UNLESS NOTED OTHERWISE.

5 TYPICAL TRENCH FOR REUSE INSTALLATIONS IN AREAS OUTSIDE ROADWAYS

N.T.S.

NO.	DATE	REVISION	BY	APVD

DSGN	S. PERROTTO	DR	J. CULWELL	CHK	R. EDWARDS	APVD	K. BRAL

TRICO ENGINEERING, LLC
211 SWANSON AVENUE, STE. 204
LAKE HAVASU CITY, AZ 86403
WWW.TRICOENGINEERING.COM

JK ENGINEERS INC
ENGINEERS • PLANNERS • SURVEYORS
PHOENIX, AZ 85020
FARGO, ND 58102
(701) 893-8000
WWW.JKENGINEERS.COM

VADOSE WELL DESIGN
107015
LAKE HAVASU CITY
2330 MCCULLOCH BLVD. N.
LAKE HAVASU CITY, AZ 86403
(928) 855-2116

Jacobs

CIVIL
DETAILS

N.T.S.
VERIFY SCALE
BAR IS ONE INCH ON ORIGINAL DRAWING.
0 1"

DATE	OCTOBER 2023
PROJ	D3607700
DWG	C-3
SHEET	8 of 16

REUSE OF DOCUMENTS: THIS DOCUMENT, AND THE IDEAS AND DESIGNS INCORPORATED HEREIN, AS AN INSTRUMENT OF PROFESSIONAL SERVICE, IS THE PROPERTY OF JACOBS AND IS NOT TO BE USED, IN WHOLE OR IN PART, FOR ANY OTHER PROJECT WITHOUT THE WRITTEN AUTHORIZATION OF JACOBS.
© JACOBS 2023. ALL RIGHTS RESERVED.

EXPIRES 12-31-2025

F:\Trico Engineering LLC\Projects\2022\22-063_Jacobs-Vadose Zone Well Design\CAD\Improvement Plans\22-063_Vadose Well 8 Plans.dwg LS:(10/20/2023 - wwagenmatto) - LP: 10/20/2023 11:41 AM

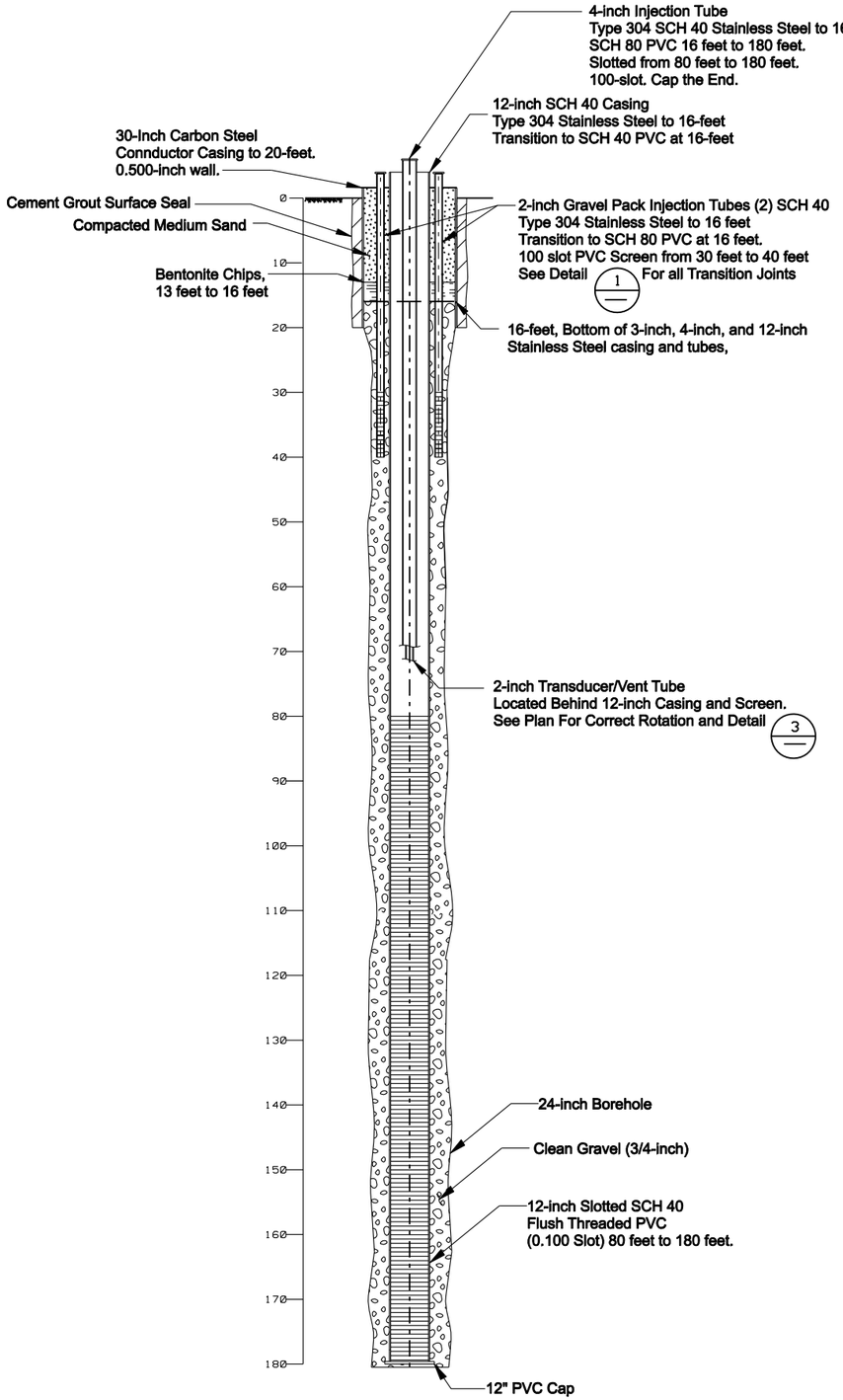

WELL 8 & WELL 9 WELL CONSTRUCTION DIAGRAM

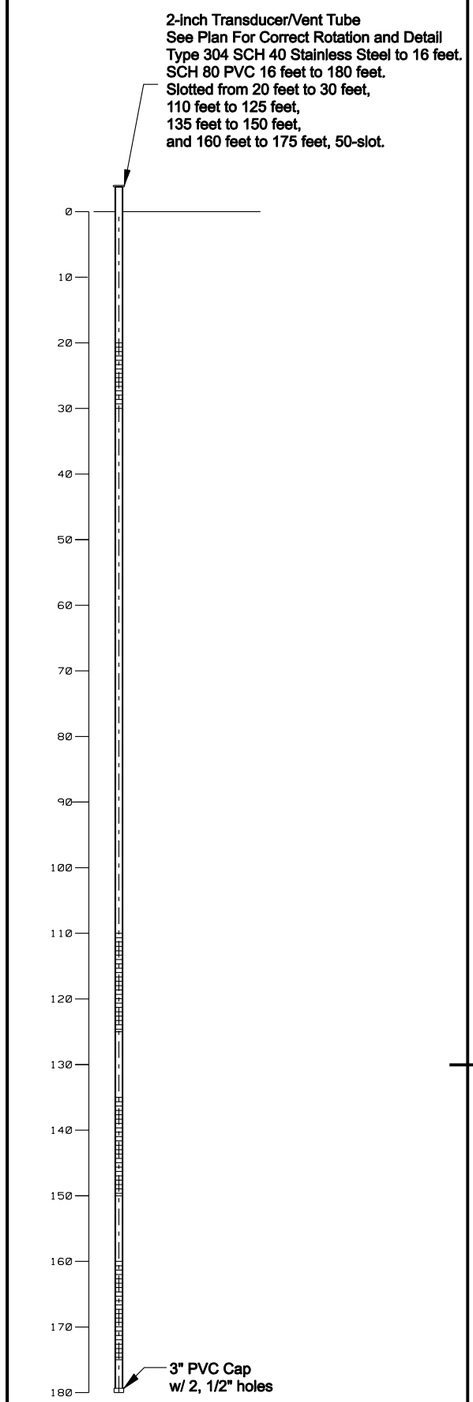

3 Transducer/Vent Tube

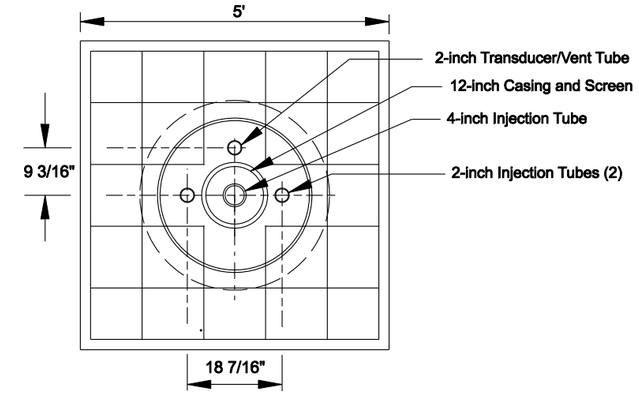

Plan

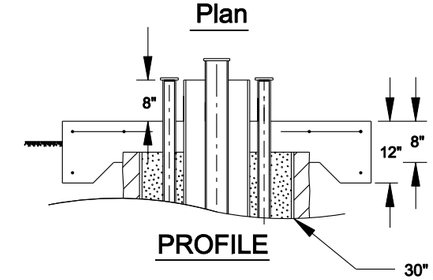

PROFILE

NOTES

1. Install Only On Alternate Vadose Well #9 if Constructed.
2. All Reinforcing Bars No. 5
3. Min Inbedment 2"
4. Do Not Weld Reinforcement to Pipe
5. Extend 30" Pipe 2" into Pad.
6. Compact Earth/Fill Beneath Conrete Inside and Outside of 30" Pipe
7. See Detail 3 M-2 for Concrete Pad Details

2 Transitional Concrete Pad

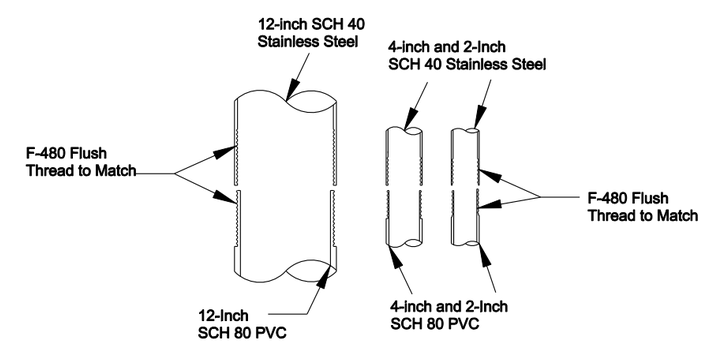

1 Stainless Steel to PVC Transition

NO.	DATE	REVISION	BY	APVD

DSGN K.BRAL | DR K.BRAL | CHK R.EDWARDS | APVD K.BRAL

TRICO ENGINEERING, LLC

23 SHANNON AVENUE
STE. 2-2W
LAKE HAVASU CITY, AZ 86403
928-236-1405
WWW.TRICOENGINEERING.LLC.COM

ENGINEERING INC
PROFESSIONAL
PARCO NO 8918
WWW.JACOBS.COM

CONSTRUCTION OF
VADOSE ZONE
WELL 8 & FACILITIES
107015

LAKE HAVASU CITY
2338 MCCULLOCH BLVD N.
LAKE HAVASU CITY, AZ 86403
(928) 855-2116

Jacobs

CIVIL
WELL 8 AND 9 CONSTRUCTION

VERIFY SCALE
BAR IS ONE INCH ON ORIGINAL DRAWING.
0 1"

DATE OCTOBER 2023
PROJ 107015
DWG C-4
SHEET 9 of 16

REUSE OF DOCUMENTS: THIS DOCUMENT, AND THE IDEAS AND DESIGNS INCORPORATED HEREIN, AS AN INSTRUMENT OF PROFESSIONAL SERVICE, IS THE PROPERTY OF JACOBS AND IS NOT TO BE USED, IN WHOLE OR IN PART, FOR ANY OTHER PROJECT WITHOUT THE WRITTEN AUTHORIZATION OF JACOBS.
©JACOBS 2022. ALL RIGHTS RESERVED.

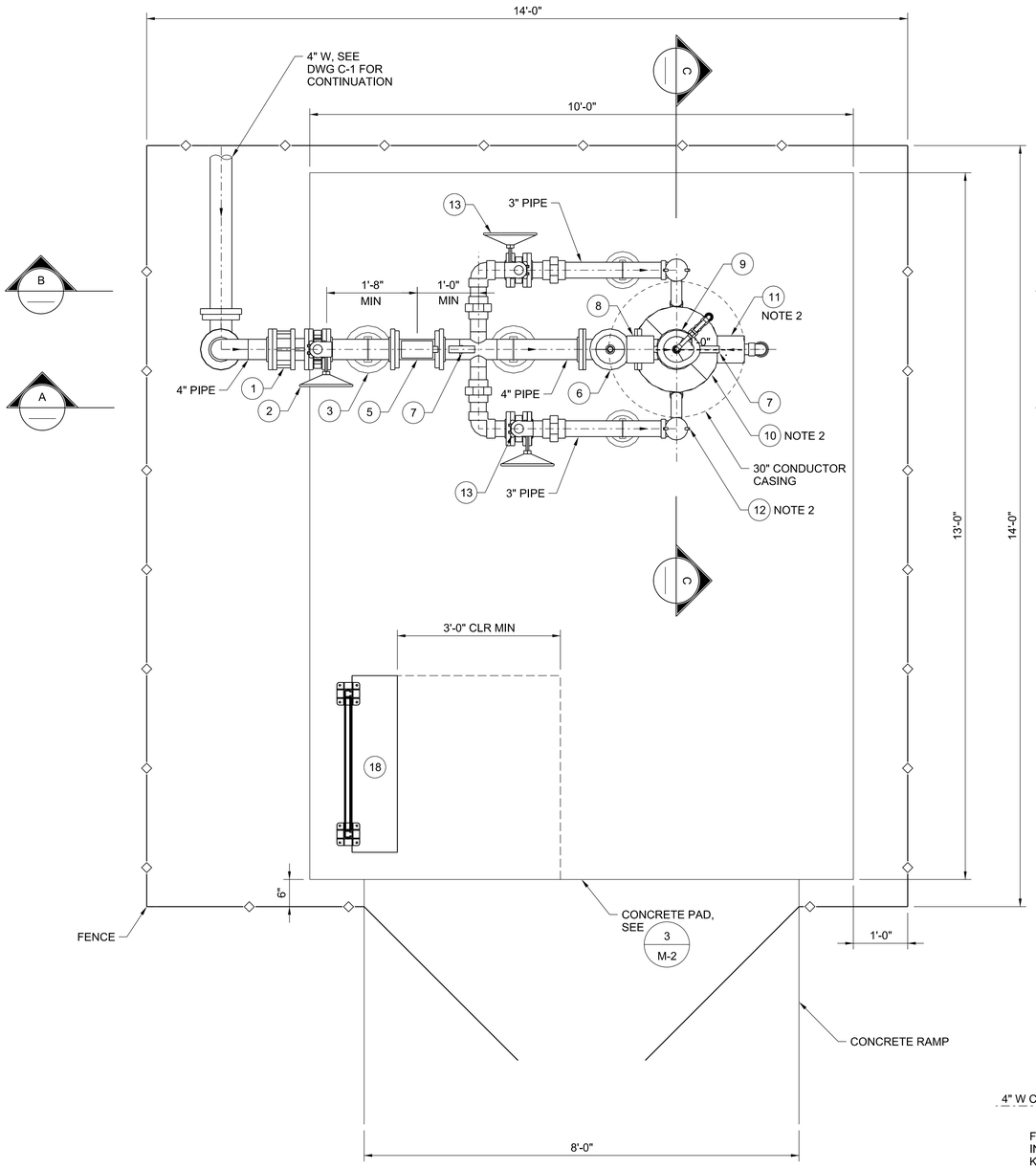

PLAN
3/4"=1'-0"

NOTES

1. FOR 30" CONDUCTOR CASING, 12-INCH CASING, 4-INCH INJECTION PIPE, 2-INCH INJECTION PIPES AND 2-INCH TRANSDUCER / VENT PIPE, SEE DWG C-4, ALL PIPE STUB UPS FROM BELOW GRADE SHALL BE 304 STAINLESS STEEL TO THE POINT SHOWN.
2. WELL HEAD PIPING ALL PIPES 1/2-INCH TO 3-INCH SHALL BE CARBON STEEL SCH40 THREADED OR FLANGED AS SHOWN, 4-INCH PIPE SHALL BE CARBON STEEL SCH40, FLANGED WITH ANSI CLASS 150 FLANGES, PER SPECIFICATION 02550.
3. PROVIDE FLANGE INSULATION KIT BETWEEN DIFFERENT METAL PIPING MATERIALS AND BELOW GRADE TRANSITIONS.
4. PROVIDE 2-INCH DIELECTRIC UNIONS BETWEEN CARBON STEEL PIPE AND STAINLESS STEEL PIPE.
5. SEE SPECIFICATION 09900 FOR PROTECTIVE COATING REQUIREMENT.

BILL OF MATERIALS

NO.	DESCRIPTION
1	4" DISMANTLING JOINT, CS
2	4" FLANGED BUTTERFLY VALVE
3	PIPE SUPPORT, SEE DETAIL 1 ON M-2
4	2" DIELECTRIC UNION
5	4" MAGNETIC FLOW METER, FLANGED
6	4" PRESSURE REDUCING VALVE, CLA-VAL MODEL 690-01
7	PI - PRESSURE INDICATOR, 1/2" NPT, 4 1/2" DIAL, 0 - 30 PSI
8	PIT - PRESSURE TRANSMITTER, 1/2" NPT
9	2" AIR AND VACUUM VALVE
10	12" WELL FLANGE, SPLIT 304 SST, SEE DETAIL 1 ON M-2
11	LIT - SOUNDING TUBE LEVEL TRANSDUCER TERMINATION ENCLOSURE
12	3" QUICK CONNECT FEMALE NPT WITH CAP, 304 SST
13	3" BUTTERFLY VALVE
14	4" FLANGE INSULATION KIT
15	4" BLIND FLANGE WITH 2" NPT COUPLING, CS
16	2" BALL VALVE, NPT, BRASS
17	1/2" BALL VALVE, NPT, BRASS
18	ELECTRICAL PANEL AND FLOW TRANSMITTER
19	2" TEE, 304 SST, NPT
20	2", 22.5 ELL, 304 SST, NPT
21	2", 45 ELL, 304 SST, NPT

NPT = NATIONAL PIPE THREAD
CS = CARBON STEEL
SS = STAINLESS STEEL

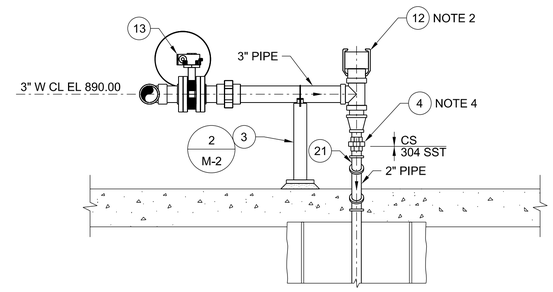

B SECTION
3/4"=1'-0"

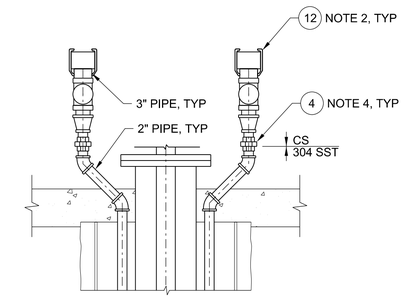

C SECTION
3/4"=1'-0"

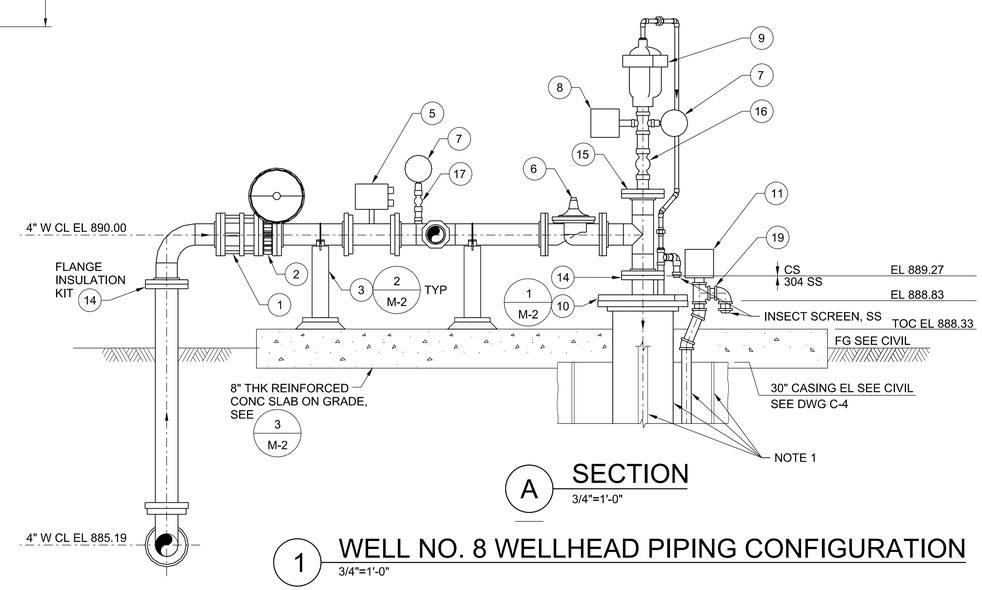

A SECTION
3/4"=1'-0"

1 WELL NO. 8 WELLHEAD PIPING CONFIGURATION
3/4"=1'-0"
C-X

Registered Professional Engineer (Civil) CERTIFICATE NO. 45507 KEVIN M. BRAL Date Signed 10/26/2023 ARIZONA U.S.A.
Expires 06/30/2025

NO.	DATE	REVISION	BY	APVD

DSGN Q WANG | DR J WILCOX | CHK R EDWARDS | APVD K BRAL

© JACOBS 2020. ALL RIGHTS RESERVED.

TRICO ENGINEERING, LLC
231 SWANSON AVENUE, STE. 204
LAKE HAVASU CITY, AZ 86403
928-505-0880
WWW.TRICOENGINEERINGLLC.COM

ENGINEERS INC
PHOENIX, AZ 85085
(602) 952-2000
WWW.JK-ENGINEERS.COM

CONSTRUCTION OF VADOSE ZONE WELL 8 & FACILITIES
107015
LAKE HAVASU CITY
2330 MCCULLOCH BLVD N.
LAKE HAVASU CITY, AZ 86403
(928) 855-2116

LAKE HAVASU CITY, ARIZONA • INCORPORATED 1978

REUSE OF DOCUMENTS: THIS DOCUMENT, AND THE IDEAS AND DESIGNS INCORPORATED HEREIN, AS AN INSTRUMENT OF PROFESSIONAL SERVICE, IS THE PROPERTY OF JACOBS AND IS NOT TO BE USED, IN WHOLE OR IN PART, FOR ANY OTHER PROJECT WITHOUT THE WRITTEN AUTHORIZATION OF JACOBS.

Jacobs

MECHANICAL
PLAN & SECTION

VERIFY SCALE
BAR IS ONE INCH ON ORIGINAL DRAWING.
0 1"

DATE	OCTOBER 2023
PROJ	D3412600
DWG	M-1
SHEET	10 of 16

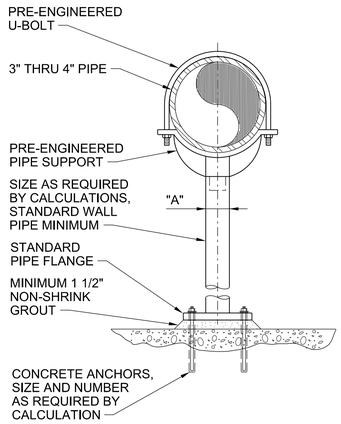

DIMENSION TABLE	
PIPE SIZE	"A" MINIMUM NOMINAL PIPE SIZE
3"	2-1/2"
4"	3"

NOTE:
SUBMIT FINAL DESIGN AND CALCULATIONS FOR SUPPORT AND ANCHORAGE AS SPECIFIED.

1 PIPE SADDLE SUPPORT PEDISTAL TYPE - NON-ADJUSTABLE

NTS

M-1

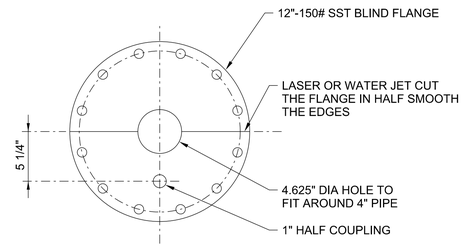

2 WELL FLANGE

1 1/2"=1'-0"

M-1

NOTE

SEE DWG M-1 FOR BILL OF MATERIALS AND GENERAL NOTES.

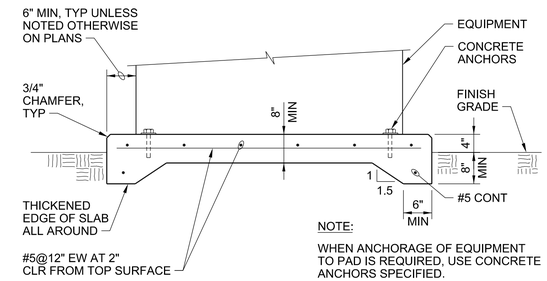

NOTE:
WHEN ANCHORAGE OF EQUIPMENT TO PAD IS REQUIRED, USE CONCRETE ANCHORS SPECIFIED.

3 CONCRETE PAD

NTS

M-1, C-4

Registered Professional Engineer (Civil)
CERTIFICATE NO. 46507
KEVIN M. BRAL
Date Signed 10/24/2023
ARIZONA U.S.A.
Expires 06/30/2025

NO.	DATE	REVISION	BY	APVD

DSGN Q WANG | DR J WILCOX | CHK R EDWARDS | APVD K BRAL

© JACOBS 2020. ALL RIGHTS RESERVED.

TRICO ENGINEERING, LLC
231 SWANSON AVENUE, STE. 204
LAKE HAVASU CITY, AZ 86403
(928) 855-1150
WWW.TRICOENGINEERINGLLC.COM

Jacobs ENGINEERS INC
PHOENIX, AZ 85085
(602) 330-8000
WWW.JACENGINEERS.COM

CONSTRUCTION OF
VADOSE ZONE
WELL 8 & FACILITIES
107015

LAKE HAVASU CITY
2330 MCCULLOCH BLVD N.
LAKE HAVASU CITY, AZ 86403
(928) 855-2116

LAKE HAVASU CITY, ARIZONA • INCORPORATED 1978

REUSE OF DOCUMENTS: THIS DOCUMENT, AND THE IDEAS AND DESIGNS INCORPORATED HEREIN, AS AN INSTRUMENT OF PROFESSIONAL SERVICE, IS THE PROPERTY OF JACOBS AND IS NOT TO BE USED, IN WHOLE OR IN PART, FOR ANY OTHER PROJECT WITHOUT THE WRITTEN AUTHORIZATION OF JACOBS.

MECHANICAL
DETAILS

VERIFY SCALE
BAR IS ONE INCH ON ORIGINAL DRAWING.
0 1"

DATE	OCTOBER 2023
PROJ	D3412600
DWG	M-2
SHEET	11 of 16

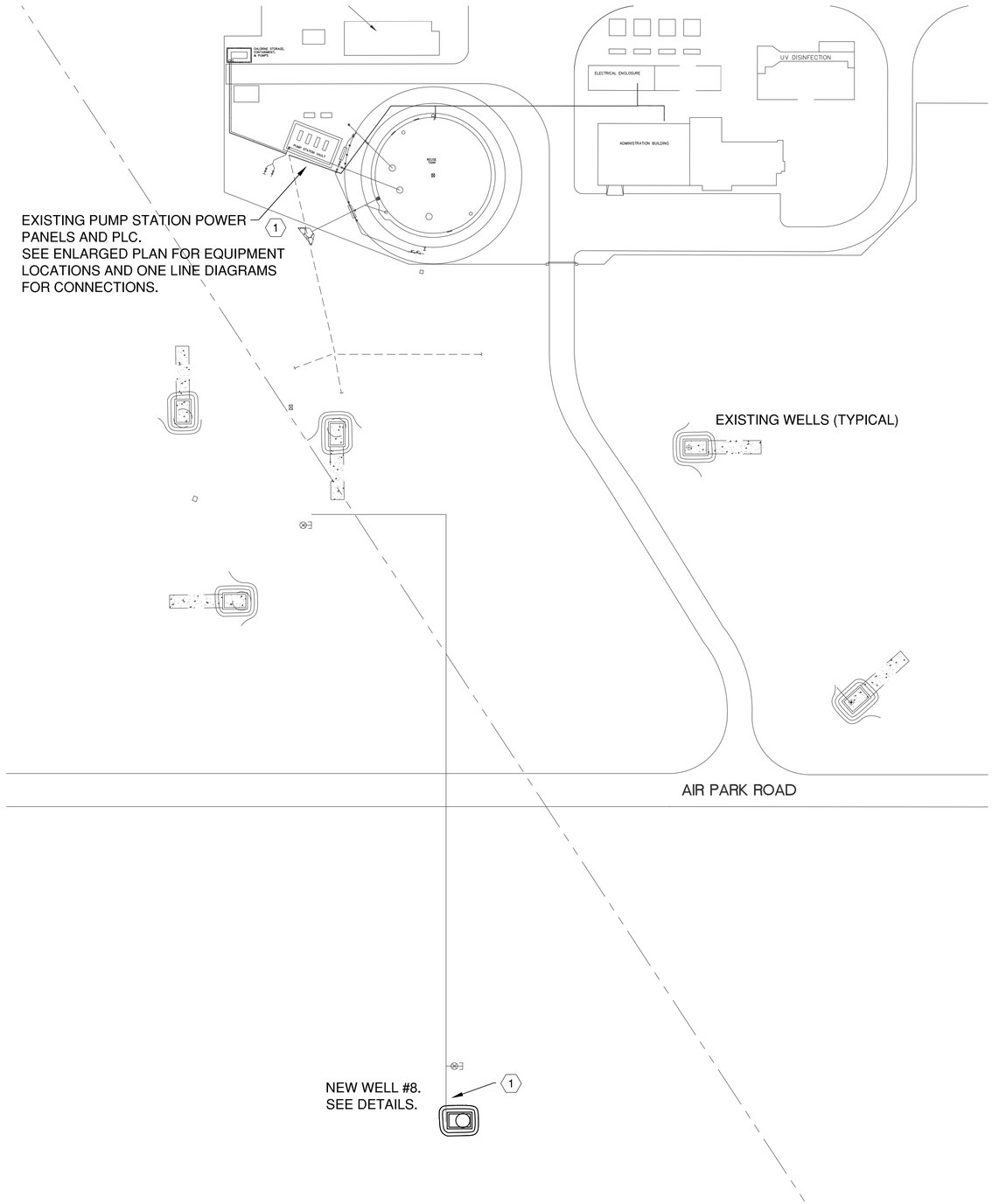

SITE PLAN NOTES:

1. PROVIDE CONNECTION TO PLC NETWORK AT EXISTING PUMP STATION PLC.
   PROVIDE WIRELESS LINK TO NEW WELL SITE.
   SEE PLC ONE-LINE DIAGRAM.

N

1 / E-1 OVERALL ELECTRICAL PLAN

0 40' 80'

JOEL A. KATH
Date Signed 10-17-2023
ARIZONA, U.S.A.
Expires: 3-31-2025

NO.	DATE	REVISION	BY	APVD

DSGN	J. KATH	DR	M. TURNQUIST
CHK	R. BURNSTAD	APVD	J. KATH

TRICO ENGINEERING, LLC
231 SWANSON AVENUE,
LAKE HAVASU CITY, AZ 86403
928-230-4869
WWW.TRICOENGINEERINGLLC.COM

ENGINEERS INC
FARGO, ND 58102
WWW.JACOBS.COM

CONSTRUCTION OF VADOSE ZONE WELL & FACILITIES
107015
LAKE HAVASU CITY
2330 MCCULLOCH BLVD N.
LAKE HAVASU CITY, AZ 86403
(928) 854-5116

LAKE HAVASU CITY

Jacobs

ELECTRICAL

OVERALL ELECTRICAL SITE PLAN

REUSE OF DOCUMENTS: THIS DOCUMENT, AND THE IDEAS AND DESIGNS INCORPORATED HEREIN, AS AN INSTRUMENT OF PROFESSIONAL SERVICE, IS THE PROPERTY OF JACOBS AND IS NOT TO BE USED, IN WHOLE, OR IN PART, FOR ANY OTHER PROJECT WITHOUT THE WRITTEN AUTHORIZATION OF JACOBS.

©JACOBS 2020. ALL RIGHTS RESERVED.

VERIFY SCALE
BAR IS ONE INCH ON ORIGINAL DRAWING.
0 1"

DATE	OCTOBER 2023
PROJ	D3607700
DWG	E-1
SHEET	12 of 16

C:\USERS\JOEL\PROOF DROP\ROX\MIKE TURNQUIST\PROJECTS\2022\22-014 LHC NRWWTP VADOSE WELL\DATA\DWG\SIE\ELECTRICAL PLANS\22-014 LHC NRWWTP VADOSE 10-17-2023.DWG
10/17/2023 7:51:41 PM

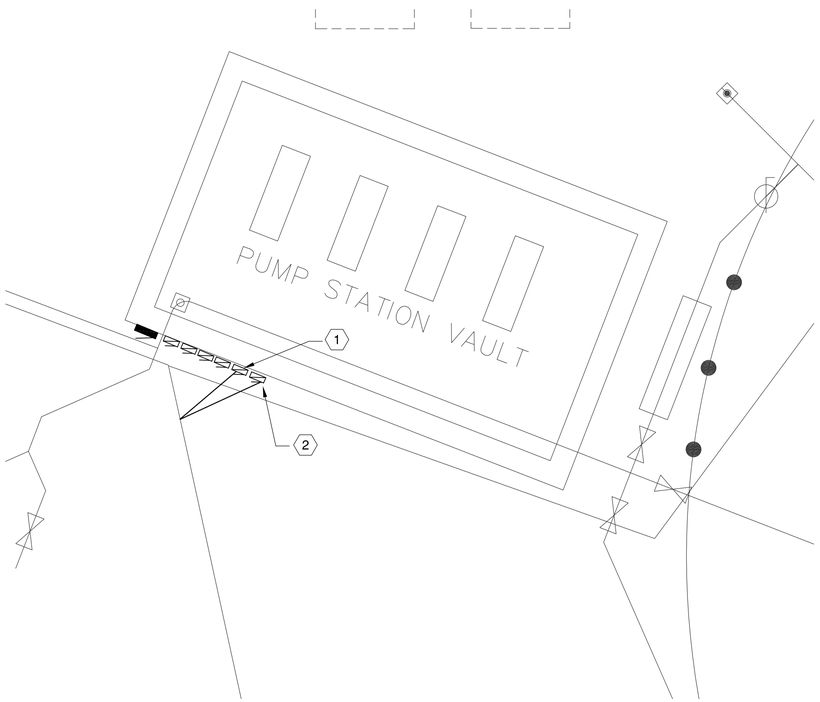

N

1 / E-2 ENLARGED ELECTRICAL PLAN - PUMP STATION

0 10' 20'

PUMP STATION PLAN NOTES

1. EXISTING PLC CABINET. PROVIDE NEW RADIO LINK AND WIRELESS COMMUNICATION TO NEW RTU#8. SEE DETAIL THIS SHEET.
2. EXISTING PANEL P1. 120/208V 3PH. TO REMAIN. PROVIDE CONNECTION TO 20A-1P BREAKER, 3#12, 3/4"C. AND CONNECTION TO NEW WIRELESS LINK RADIO.

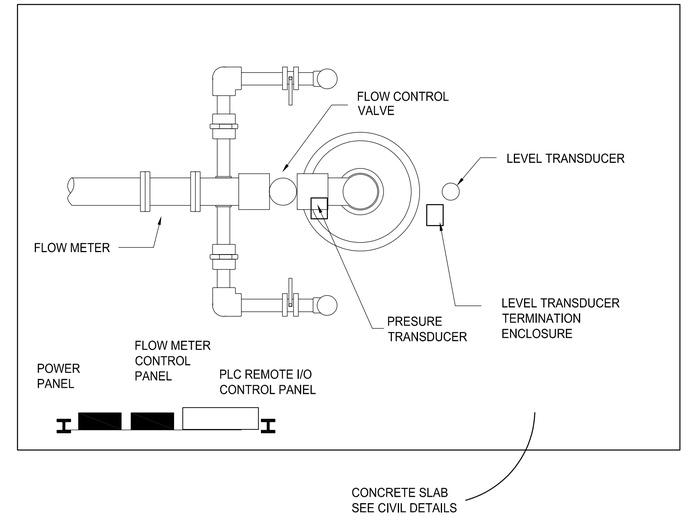

N

2 / E-2 WELL HEAD PLAN

NO SCALE

NOTES:

SEE CIVIL AND MECHANICAL FOR DETAILS AND PIPING DIMENSIONS. NOTE THAT THE WELL HEAD AND SLAB IS BUILT UP TO A HIGHER ELEVATION THAN SURROUNDING NATIVE GROUND ELEVATION.

SEE ONE-LINE DIAGRAMS FOR CONDUIT AND CONDUCTOR REQUIREMENTS.

ROUTE PVC CONDUIT BELOW CONCRETE SLAB FROM DEVICES TO CONTROL PANELS. EMERGE THROUGH CONCRETE WITH RIGID STEEL CONDUIT (MASTIC WRAPPED) . COORDINATE LOCATIONS TO AVOID TRIP HAZZARDS AND POTENTIAL PHYSICAL DAMAGE.

PROVIDE SEPARATE STRUT SUPPORT OF ABOVE GRADE RIGID STEEL CONDUIT AND BOXES.

REGISTERED PROFESSIONAL ENGINEER (ELECTRICAL) JOEL A. KATH ARIZONA, U.S.A. Date Signed 10-17-2023 Expires: 3-31-2025

NO.	DATE	REVISION	BY	APVD

DSGN J. KATH DR M. TURNQUIST CHK R. BURNSTAD APVD J. KATH

©JACOBS 2020. ALL RIGHTS RESERVED.

TRICO ENGINEERING, LLC
231 SWANSON AVENUE, P.O. BOX 2000
LAKE HAVASU CITY, AZ 86403
928-230-4869
WWW.TRICOENGINEERINGLLC.COM

ENGINEERS INC
PO BOX 2000
FARGO, ND 58102
(701) 364-1000
WWW.JACOBS.COM

CONSTRUCTION OF VADOSE ZONE WELL & FACILITIES
107015
LAKE HAVASU CITY
2330 MCCULLOCH BLVD N.
LAKE HAVASU CITY, AZ 86403
(928) 854-5116

LAKE HAVASU CITY

Jacobs

ELECTRICAL

ENLARGED PLANS, DETAILS

REUSE OF DOCUMENTS: THIS DOCUMENT, AND THE IDEAS AND DESIGNS INCORPORATED HEREIN, AS AN INSTRUMENT OF PROFESSIONAL SERVICE, IS THE PROPERTY OF JACOBS AND IS NOT TO BE USED, IN WHOLE, OR IN PART, FOR ANY OTHER PROJECT WITHOUT THE WRITTEN AUTHORIZATION OF JACOBS.

VERIFY SCALE
BAR IS ONE INCH ON ORIGINAL DRAWING.
0 1"

DATE	OCTOBER 2023
PROJ	D3607700
DWG	E-2
SHEET	13 of 16

ANSI_D_107015.dgn

C:\USERS\JOEL\PROOF DROP\ROX\MIKE TURNQUIST\PROJECTS\2022\22-014 LHC NRWWTP VADOSE WELL\DATA\DWG\SIB\ELECTRICAL PLANS\22-014 LHC NRWWTP VADOSE 10-17-2023.DWG

10/17/2023 7:53:26 PM

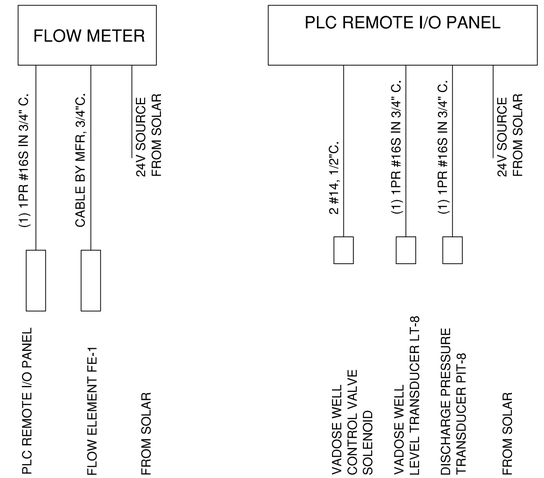

2 / E-3 ELECTRICAL EQUIPMENT ONE-LINE DIAGRAMS

NO SCALE

3 / E-3 WIRELESS CONNECTION ONE-LINE DIAGRAM

NO SCALE

NO.	DATE	REVISION	BY	APVD

DSGN J. KATH | DR M. TURNQUIST | CHK R. BURNSTAD | APVD J. KATH

TRICO ENGINEERING, LLC
231 SWANSON AVENUE, SUITE A
LAKE HAVASU CITY, AZ 86403
928-230-6989
WWW.TRICOENGINEERINGLLC.COM

ENGINEERS INC
FARGO, ND 58102
701-235-5529
WWW.JACOBS.COM

CONSTRUCTION OF VADOSE ZONE WELL 8 FACILITIES
107015
LAKE HAVASU CITY
2330 MCCULLOCH BLVD N.
LAKE HAVASU CITY, AZ 86403
(928) 855-2116

LAKE HAVASU CITY

Jacobs

ELECTRICAL

ELECTRICAL ONE-LINE DIAGRAMS

REUSE OF DOCUMENTS: THIS DOCUMENT, AND THE IDEAS AND DESIGNS INCORPORATED HEREIN, AS AN INSTRUMENT OF PROFESSIONAL SERVICE, IS THE PROPERTY OF JACOBS AND IS NOT TO BE USED, IN WHOLE OR IN PART, FOR ANY OTHER PROJECT WITHOUT THE WRITTEN AUTHORIZATION OF JACOBS.

© JACOBS 2020. ALL RIGHTS RESERVED.

VERIFY SCALE

BAR IS ONE INCH ON ORIGINAL DRAWING.
0 1"

DATE	OCTOBER 2023
PROJ	D3607700
DWG	E-3
SHEET	14 of 16

C:\USERS\JOEL\PROOF DROP\ROXANNE TURNQUIST\PROJECTS\2022\2224114 LHC NRWWTP VADOSE WELL\DATA\DWG\ELECTRICAL PLANS\224114 LHC NRWWTP VADOSE 10-17-2023.DWG
10/17/2023 7:54:22 PM

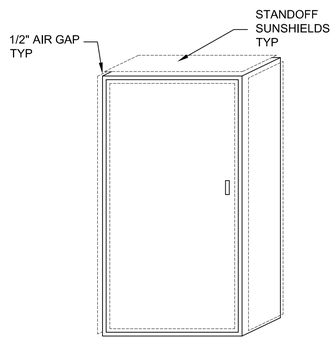

ENCLOSURE STANDOFF SUNSHIELD DETAIL

(1) NEMA 4/12 ENCLOSURE. WHITE. PROVIDE WHITE PANEL STANDOFF SUNSHIELD PANELS. (4 EACH).
- (1) TOP PANEL
- (2) SIDE PANELS
- (1) FRONT-DOOR PANEL
- (0) REAR PANEL (NORTH FACING)

ALL CONDUIT TO ENTER BOTTOM OF ENCLOSURE.

ENCLOSURE TO BE SIZED PER PLC PANEL FABRICATOR. NOMINAL 72" TALL X 34" WIDE X 18" DEEP.

PROVIDE FREESTANDING LEGS FOR ENCLOSURE.

1 / E-4 PLC REMOTE I/O ENCLOSURE SUNSHIELD DETAIL

NO SCALE

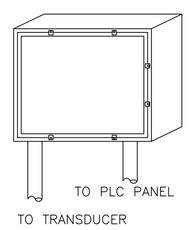

3 / E-4 WELL LEVEL TRANSDUCER TRANSITION ENCLOSURE

NO SCALE

ENCLOSURE SIZED TO CONTAIN TRANSDUCER CABLE TERMINATION MODULE.

TERMINATION MODULE BY MANUFACTURER. TERMINATE TRANSDUCER CABLE TO SHIELDED 4-20mA CABLE.

STRUT SUPPORT RACK MOUNT ENCLOSURE SEPARATE FROM CONDUIT STUBS.

ALL CONDUIT TO ENTER BOTTOM OF ENCLOSURE. PROVIDE RIGID STEEL CONDUIT FOR ALL ABOVE GROUND LOCATIONS.

ENCLOSURE TO BE SIZED TO CONTAIN TRANSDUCER CABLE TERMINATION MODULE.

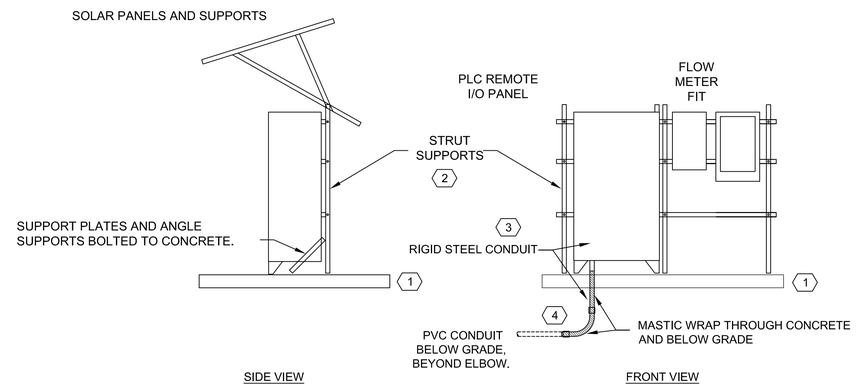

2 / E-4 ELECTRICAL EQUIPMENT ELEVATION DETAILS

NO SCALE

ELECTRICAL EQUIPMENT ELEVATION DETAIL NOTES

(1) CONCRETE WELL TOP SLAB. SEE CIVIL PLANS.

(2) STRUT RACK SUPPORT FOR PANELS. PROVIDE ADDITIONAL STRUT SUPPORT UNDER PANEL AS NECESSARY.

(3) CONDUIT TO ENTER BOTTOM OF PANELS WHENEVER POSSIBLE.

(4) TRANSITION FROM BELOW GROUND PVC CONDUIT TO RIGID STEEL CONDUIT WITH RSC ELLBOW. MASTIC WRAP BELOW GRADE RSC TO 1" ABOVE CONCRETE SLAB.

NO.	DATE	REVISION	BY	APVD

DSGN J. KATH | DR M. TURNQUIST | CHK R. BURNSTAD | APVD J. KATH

TRICO ENGINEERING, LLC
231 SWANSON AVENUE,
P.O. BOX 1
LAKE HAVASU CITY, AZ 86403
928-230-4869
WWW.TRICOENGINEERINGLLC.COM

ENGINEERS INC
PROJECT MANAGERS
FARGO, ND 58102
(701) 282-7766
WWW.JACOBS.COM

CONSTRUCTION OF
VADOSE ZONE
WELL & FACILITIES
107015

LAKE HAVASU CITY
2330 MCCULLOCH BLVD N.
LAKE HAVASU CITY, AZ 86403
(928) 854-5116

LAKE HAVASU CITY

REUSE OF DOCUMENTS: THIS DOCUMENT, AND THE IDEAS AND DESIGNS INCORPORATED HEREIN, AS AN INSTRUMENT OF PROFESSIONAL SERVICE, IS THE PROPERTY OF JACOBS AND IS NOT TO BE USED, IN WHOLE, OR IN PART, FOR ANY OTHER PROJECT WITHOUT THE WRITTEN AUTHORIZATION OF JACOBS.

© JACOBS 2020. ALL RIGHTS RESERVED.

Jacobs

ELECTRICAL

ELECTRICAL DETAULS

VERIFY SCALE
BAR IS ONE INCH ON ORIGINAL DRAWING.
0 — 1"

DATE	OCTOBER 2023
PROJ	D3607700
DWG	E-4
SHEET	15 of 16

ANSI_D_107015.dgn

C:\USERS\JOEL\PROOF DROP\BOX\MIKE TURNQUIST\PROJECTS\2022\22-014 LHC NRWWTP VADOSE WELL\DATA\DWG\SHEET\ELECTRICAL PLANS\22-014 LHC NRWWTP VADOSE 10-17-2023.DWG

10/17/2023 7:54:53 PM

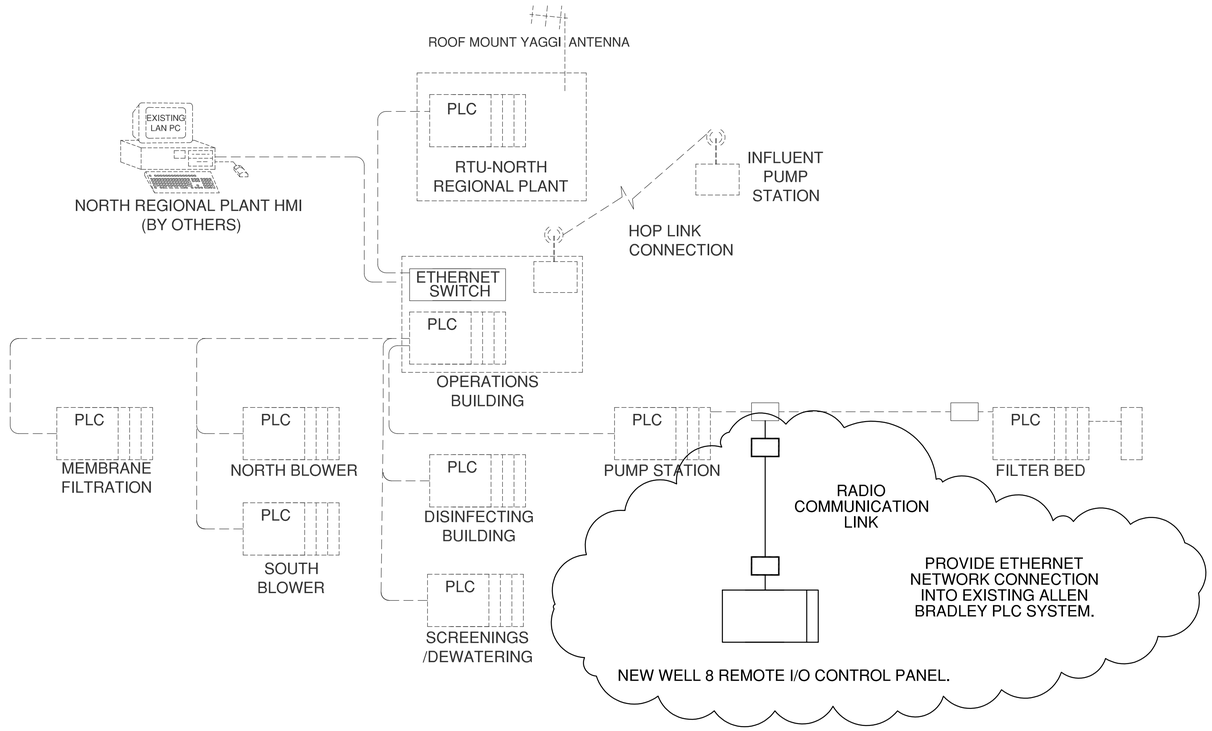

1 / I-1 NORTH REGIONAL WASTE WATER TREATEMENT PLANT INSTRUMENTATION DIAGRAMS

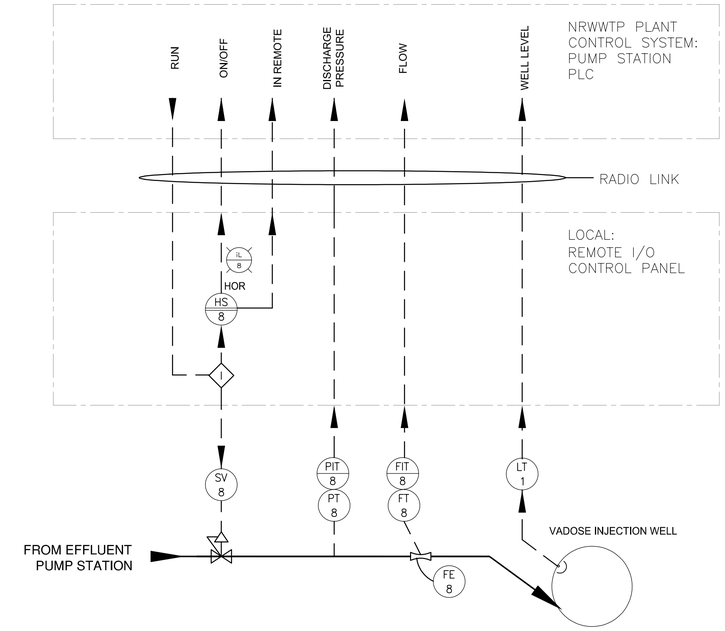

2 / I-1 PROCESS AND INSTRUMENTATION DIAGRAMS
TYPICAL EACH VADOSE

STANDARD SYMBOLS AND DESIGNATIONS

- FIELD MOUNTED
- MOUNTED ON FACE OF PANEL
- MOUNTED ON INSIDE OF PANEL
- INSTRUMENTS SHARING COMMON HOUSING
- AL # / YL # / UL # — ALARM OR PILOT LIGHT
- HS # (XX) — HAND SELECTOR SWITCH OR PUSHBUTTON. XX DENOTES FUNCTION
- AE # (XX) — ANALYZING ELEMENT XX DENOTES MEASURED SUBSTANCE/CONCENTRATION
- FY # (XX) — INSTRUMENT RELAY MOUNTED IN REAR OF PANEL (BROKEN LINE) ACTIVATES AND DEACTIVATES CONTROL AND/OR ALARM SWITCHES AT PRESET SIGNAL VALUES. SEE BELOW FOR FUNCTIONS (X).

>	HIGH SELECTOR
<	LOW SELECTOR
I/I	CURRENT/CURRENT CONVERTER
R/I	RESISTANCE/CURRENT CONVERTER
AV	AVERAGE
%	RATIO
ACK	ACKNOWLEDGE
E–STP	EMERGENCY STOP
FSR	FORWARD-STOP-REVERSE
H	ALARM HORN
HOR	HAND-OFF-REMOTE
JOG	JOG OR PULSE
LOR	LOCAL-OFF-REMOTE
MAN	MANUAL
OC	OPEN-CLOSE
OO	OFF-ON
OSC	OPEN-STOP-CLOSE
POT	POTENTIOMETER
RS	RESET
SS	START PUSHBUTTON AND STOP PUSHBUTTON (SHOWN AS ONE DEVICE FOR CLARITY)
STP	STOP
STA	START
A	ALARM BEACON LETTER INDICATES COLOR

- FIT # / M — MAGNETIC FLOW METER FLOWTUBE TYPE
- PI ## / PS ## — PRESSURE GAUGE / SWITCH (WITH ANNULAR DIAPHRAM SEAL)

HAND SWITCH DESIGNATIONS

HS 1 SS — DESIGNATION TYPE

OA	ON-AUTO
OOA	ON-OFF-AUTO
LR	LOCAL REMOTE
OC	OPEN-CLOSE
OO	ON-OFF
OOR	ON-OFF-REMOTE
LOR	LOCAL-OFF-REMOTE
FR	FORWARD-REVERSE
SS	START/STOP

EQUIPMENT ABBREVIATION LIST

ADDITIONAL DESIGNATIONS MAY ACCOMPANY VALVE OR GATE SYMBOLS:

NC	NORMALLY CLOSED
FC	FAILS CLOSED
FO	FAILS OPEN
FIP	FAILS IN LAST POSITION

TAG NUMBERS AND DESIGNATIONS

PIT 1-1 / SO_2

- FIRST LETTER
- SUCEEDING LETTERS
- NUMBER AFTER DASH DENOTES MULTIPLE DEVICES IN IDENTICAL DUPLICATE SYSTEMS. LETTER AFTER THE LOOP NUMBER IS USED TO DISTINGUISH MULTIPLE SIMILAR DEVICES IN THE SAME INSTRUMENT LOOP.
- LOOP DESIGNATION
- SEE INSTRUMENTATION ABBREVIATIONS

STANDARD ONE LINE DIAGRAM LEGEND

- 500KVA 4.16KV Δ–480Y/277V — TRANSFORMER WITH PRIMARY AND SECONDARY VOLTAGE, AND KVA RATING AS NOTED.
- 20 — 22: 3#8, #10G, 2" — CIRCUIT NO.22 WITH 3#8 INSULATED CONDUCTORS, 1#10, GROUND WIRE ALL IN 2" CONDUIT TO 20 HP MOTOR.
- AUX. ITEMS MAY NOT BE SHOWN COMPLETELY. — ONE-LINE SHOWING POWER AND CONTROL TO A PACKAGE UNIT, AS FOR EXAMPLE A RESIDUAL ANALYZER OR A PUMP CONTROL DIRECTOR, SHALL IMPLY THAT ANY AND ALL ASSOCIATED EQUIPMENT SHALL ALSO BE INSTALLED AND WIRED AS REQUIRED BY THE EQUIPMENT FURNISHED.
- 3P–20 — LOW VOLTAGE AIR CIRCUIT BREAKER, 3 POLE, 20 AMPERE
- S4 — SIZE 4 COMBINATION MAGNETIC MOTOR STARTER

CONDUIT & WIRING INSTALLATION LEGEND

- CONDUIT EXPOSED
- CONDUIT CONCEALED
- SHORT DASH FOR EACH PHASE CONDUCTOR. LONG DASH FOR NEUTRAL CONDUCTOR. CIRCULAR DASH FOR GROUND WIRE.
- PPHS1–5 — TYPICAL HOME RUN TO BE ROUTED TO PANEL PPHS1 & CONNECTED TO CIRCUIT #5

STANDARD SCHEMATIC DRAWINGS

- WIRE INTERSECTION POINT
- EXTERNAL CONNECTION POINT
- NORMALLY OPEN CONTACT
- NORMALLY CLOSED CONTACT
- STARTER, CONTACTOR OR RELAY COIL
- NORMALLY OPEN PUSH BUTTON
- NORMALLY CLOSED PUSH BUTTON
- INDICATING LIGHT
- FUSE
- CONTROL TRANSFORMER
- SWITCH
- MANUAL STARTER
- OVERLOAD
- TEMPERATURE SWITCH (CLOSING ON RISING TEMPERATURE)
- LIMIT SWITCH (NORMALLY OPEN)
- PRESSURE SWITCH (OPENS ON INCREASING VACUUM)

STANDARD CONTROL SYSTEM LEGEND

LINE SYMBOLS

- MAJOR PROCESS PIPNG OR FLOW CHANNEL. ARROW INDICATES FLOW.
- ARROW INDICATES EMERGENCY OR OPTIONAL FLOW.
- ELECTRICAL SIGNAL
- C — PROCESS OR SIGNAL LINE CONTINUED ON ANOTHER SHEET OR OTHER LOCATION.
- A — PROCESS OR SIGNAL LINE CONTINUED FROM ANOTHER SHEET OR OTHER LOCATION.

- GATE VALVE
- GLOBE VALVE
- PLUG VALVE
- DIAPHRAM VALVE
- BUTTERFLY VALVE
- BALL VALVE
- PINCH VALVE
- NEEDLE VALVE
- CHECK VALVE

ANSI_D_107015.dgn

NO.	DATE	DR	REVISION	BY	APVD

DSGN	J. KATH	M. TURNQUIST	CHK	R. BURNSTAD	APVD	J. KATH

TRICO ENGINEERING, LLC
231 SWANSON AVENUE, P.O. BOX 2370, LAKE HAVASU CITY, AZ 86403
928-230-4869
WWW.TRICOENGINEERINGLLC.COM
ENGINEERS INC
PRESCOTT, ARIZONA
FARGO, ND 58102
WWW.JACOBS.COM

CONSTRUCTION OF VADOSE ZONE WELL 8 FACILITIES
107015
LAKE HAVASU CITY
2330 MCCULLOCH BLVD N.
LAKE HAVASU CITY, AZ 86403
(928) 854-5116

LAKE HAVASU CITY

Jacobs

INSTRUMENTATION
P&ID DIAGRAMS, DETAILS
ELECTRICAL SYMBOL LEGEND

VERIFY SCALE
BAR IS ONE INCH ON ORIGINAL DRAWING.
0 — 1"

DATE	OCTOBER 2023
PROJ	D3607700
DWG	I-1
SHEET	16 of 16

REUSE OF DOCUMENTS: THIS DOCUMENT, AND THE IDEAS AND DESIGNS INCORPORATED HEREIN, AS AN INSTRUMENT OF PROFESSIONAL SERVICE, IS THE PROPERTY OF JACOBS AND IS NOT TO BE USED, IN WHOLE, OR IN PART, FOR ANY OTHER PROJECT WITHOUT THE WRITTEN AUTHORIZATION OF JACOBS.
© JACOBS 2020. ALL RIGHTS RESERVED.

JOEL A. KATH — ARIZONA, U.S.A. — Expires: 3-31-2025

C:\USERS\JOEL\PROOF DROP\ROXMIKE TURNQUIST\PROJECTS\2022\22-014 LHC NRWWTP VADOSE WELL\DATA\DWG\SELECTRICAL PLANS\22-014 LHC NRWWTP VADOSE 10-17-2023.DWG

10/17/2023 7:55:50 PM